SANY

SY750H

TRACKED EXCAVATOR

Max. Gross Power	Operating Weight	Max. Dig Depth
391 kW / 1,800 rpm	80,850 kg	7,580 mm



SANY:

FORGING THE FUTURE TOGETHER

Founded in 1989, SANY has grown into one of the world's largest construction equipment manufacturers, with global R&D and production – including European facilities – and machines working in 150+ countries. Our range spans excavators, road and port machinery, and cranes, built with proven manufacturing heritage and modern quality systems.

A GLOBAL LEADER BEHIND EVERY RANGE

From micro excavators to high-tonnage earthmovers, cranes, telehandlers, concrete machinery, road equipment and more, SANY's worldwide product range reflects decades of innovation, investment, and real-world experience.

This broad international range is proven on job sites in over 150 countries, ensuring every machine delivered to Europe is backed by extensive testing, real-world performance and the strength of a global supply chain.

ENGINEERED FOR OUR EUROPEAN CUSTOMERS

Every SANY machine destined for Europe is engineered to meet European regulations and real-world use cases – from CE and Stage V compliance to region-specific specifications and options.

For European construction customers, this worldwide capability translates directly into trust. SANY selects and engineers its product line specifically for local requirements, combining global innovation with European-quality standards, dealer support and service.

GLOBAL MANUFACTURING EXCELLENCE

SANY's long-standing commitment to quality and innovation – supported by advanced intelligent manufacturing and a sustained 5-7% of annual revenue reinvested into R&D – results in machines that deliver reliability, efficiency, and consistent performance on site.

With state-of-the-art production facilities and rigorous global testing standards, every machine is built to withstand demanding conditions and deliver long-term value.












INTRODUCING THE

SY750H

Designed to thrive in the toughest working environments, the 80-tonne SANY SY750H delivers exceptional performance for high-volume excavation and quarrying. A powerful 410kN bucket breakout force and 7.5m digging depth provide the strength to tackle the most demanding applications, while premium components and a comprehensive standard specification help maximise productivity and minimise downtime.



WHY CHOOSE SANY EXCAVATORS

WORLD RENOWNED COMPONENTS

SANY uses proven, top-tier components to deliver long-lasting reliability meaning you benefit from fewer breakdowns, longer service life, and lower ownership costs.

GREAT VALUE, UNCOMPROMISED QUALITY

You can have confidence in your return on investment. SANY excavators are loaded with the latest innovation to help reduce costs, increase productivity and protect resale value.

INDUSTRY LEADING 5 YEAR WARRANTY

Built to last and backed by an industry-leading 5-year warranty giving you lower risk, predictable costs, and confidence on every job.

LOW OPERATING COSTS

Simple engineering, readily available parts, and low fuel consumption reduce ongoing running costs, a major advantage in Europe's high-cost markets.

LOCAL SUPPORT

Europe-wide expert dealers and value-added aftermarket support keep your machine running, minimise downtime, and simplify ownership.

STANDARD ADVANCED FEATURES

SANY excavators include game-changing features as standard, no costly add-ons or custom modifications required.

SY750H

PRODUCTIVITY

Built for the toughest heavy-duty excavation, quarrying and mass earthmoving applications, the SY750H combines exceptional digging power, outstanding durability and uncompromising reliability. A high-performance Stage V Cummins engine, robust heavy-duty construction and productivity-focused hydraulics work together to deliver maximum breakout force, fast cycle times and the dependable performance needed to keep material moving in the most demanding environments.



POWERFUL, PRECISE PERFORMANCE

The SY750H is powered by a Stage V Cummins engine delivering 391kW of proven performance for demanding high-volume excavation applications.

With a 7.5m digging depth and exceptional 410kN bucket breakout force, the SY750H delivers the power and performance required to maximise output in heavy-duty excavation and quarrying environments.

The heavy-duty undercarriage and robust boom design deliver exceptional stability, providing a solid platform for confident lifting, precise operation and productive performance in demanding applications.

VERSATILE OPERATION

Equipped with standard hammer and bi-directional pipework, the SY750H is ready to run a wide range of attachments for maximum on-site versatility.

HYDRAULICS DESIGNED FOR PRODUCTIVITY

SANY's twin auxiliary hydraulics as standard allow you to operate a wider range of attachments with powered movement in both directions, giving you reversible control and faster task changes.

The hydraulic quick hitch system, operated through the touchscreen display, enables fast and convenient attachment changes, reducing downtime and increasing productivity across a wide range of applications.



SY750H

EFFICIENCY

Designed to maximise productivity while minimising operating costs, the SY750H combines fuel-efficient engine technology with intelligent hydraulic management. From reduced fuel consumption and extended refuelling intervals to energy-efficient hydraulics and optimised travel performance, every element is engineered to deliver more productive hours from every litre of fuel.

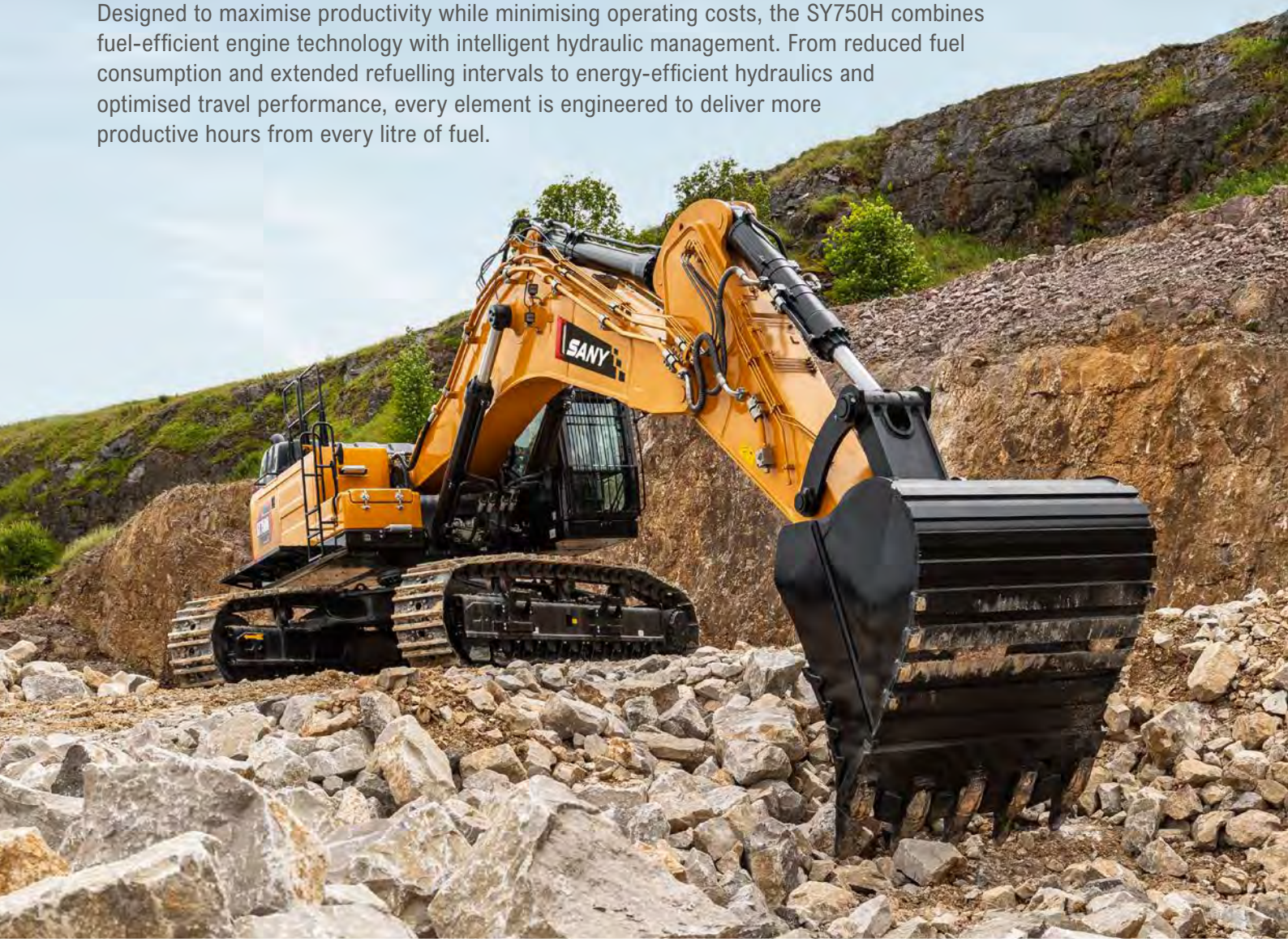

EFFICIENT OPERATION

SANY's two-speed tracking lets the operator choose high or low travel to match terrain and task reducing unnecessary revs and therefore fuel usage.

ENERGY-EFFICIENT HYDRAULICS

SANY's load-sensing hydraulics deliver only the flow and pressure the working circuits need, so the system wastes less energy and burns less fuel.

A well-matched engine and hydraulic system that measures pump output to demand reduces wasted flow and fuel resulting in lower running costs for the customer.

The SY750H features a fuel efficient Stage V Cummins engine delivering 391 kW of power at 1,800 rpm helping to reduce fuel consumption without compromising performance.

Optimised engine performance and intelligent power management ensure fuel is used effectively throughout the working day, lowering operating costs and maximising productivity from every litre.

A 940-litre fuel tank and efficient consumption allow for extended refuelling intervals, cutting downtime and fuel runs so the machine stays productive longer between stops.



SY750H

OPERATOR ENVIRONMENT

Long hours demand exceptional comfort. That's why the SY750H has been designed around the operator, combining a spacious premium cab, intuitive controls and excellent all-round visibility to create a productive working environment. With ergonomic seating and a wealth of premium features fitted as standard, every detail is engineered to reduce fatigue, improve concentration and maximise productivity throughout the working day.



PREMIUM COMFORT

The ergonomic cab features a heated air-suspension seat and adjustable armrests, providing exceptional comfort and support to help reduce fatigue, improve concentration and maximise productivity.

A heater and automatic climate control system maintain a comfortable cab environment in all weather conditions, helping operators remain productive throughout the working day.

The quiet, low-vibration engine reduces noise and vibration levels to a minimum, creating a more comfortable operating environment.

JOB SITE AWARENESS

The large windows and cab design of our excavators ensure that the operator has the best possible view of the area surrounding the machine.

EVERYDAY EASE

Clear instrumentation and a large 10-inch high-resolution colour display provide easy access to key machine information, helping operators work more efficiently and with greater confidence.

Dual proportional control joysticks are fitted as standard, providing precise, responsive control of the machine and its attachments to maximise productivity while reducing operator effort.

The SY750H is equipped with a Bluetooth radio, USB connectivity, an integrated heated/cooled storage box and generous in-cab storage, providing the convenience and practicality operators need to stay comfortable and productive throughout the day.



SY750H

SAFETY & SECURITY

Engineered to perform where it matters most, every aspect of the SY750H tracked excavator is designed to maximise operator protection and machine durability. Exceptional visibility, a strengthened frame, and strategically integrated safety features enhance operator awareness, helping reduce risk while delivering the control and assurance needed to tackle demanding worksites with confidence.

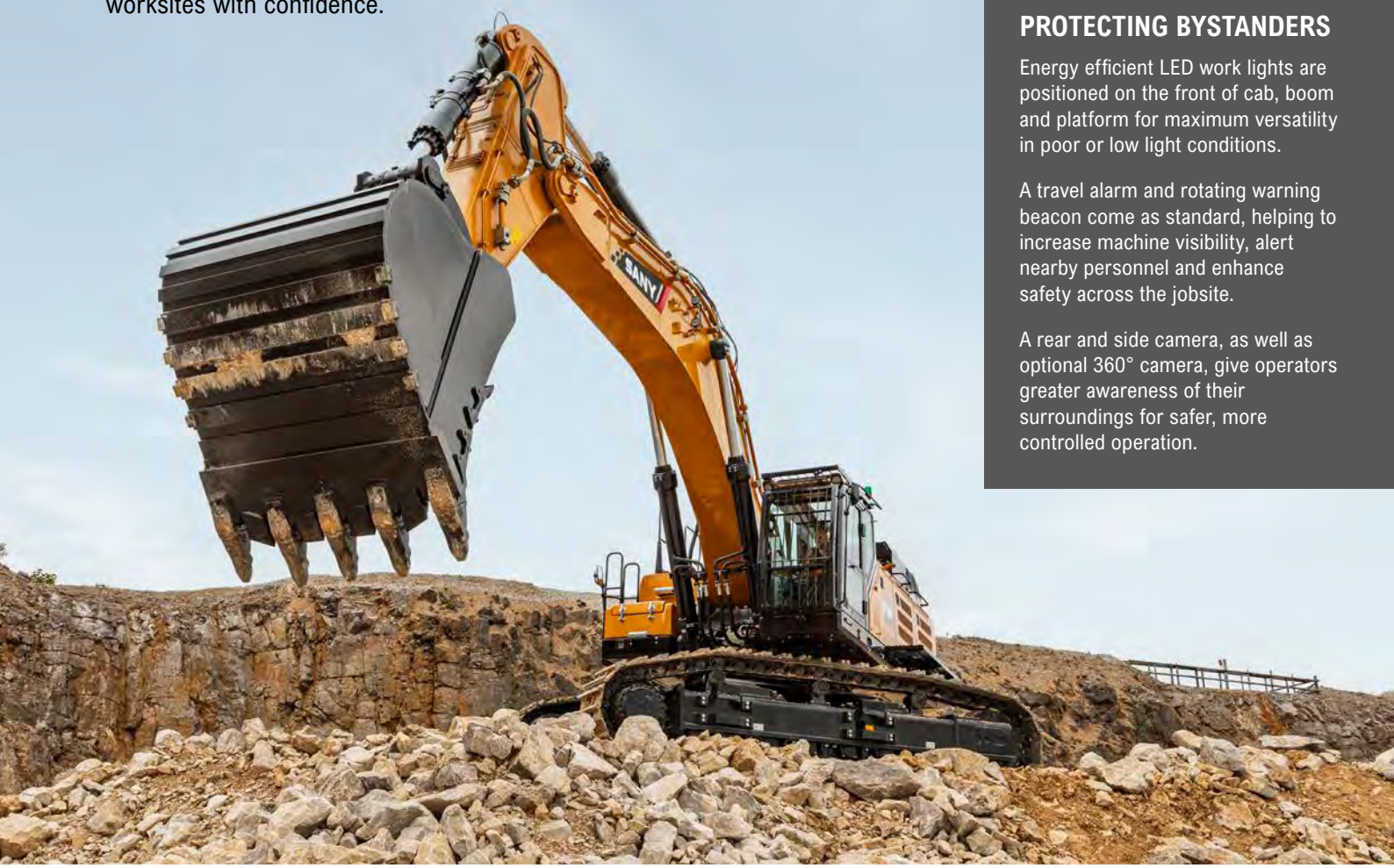

PROTECTING BYSTANDERS

Energy efficient LED work lights are positioned on the front of cab, boom and platform for maximum versatility in poor or low light conditions.

A travel alarm and rotating warning beacon come as standard, helping to increase machine visibility, alert nearby personnel and enhance safety across the jobsite.

A rear and side camera, as well as optional 360° camera, give operators greater awareness of their surroundings for safer, more controlled operation.

STRUCTURAL INTEGRITY

The SY750H is equipped with a ROPS and FOPS-certified cab, providing a high level of protection and peace of mind when working in demanding environments.

Level II cab guards with openable hinges provide enhanced operator protection while allowing easy cleaning and maintenance. Ergonomically positioned handrails also ensure safe and secure access to the upper structure, helping to reduce risk during routine inspections and servicing.

EMERGENCY SHUTDOWN

Featuring both a battery disconnect switch and an emergency stop button, the system allows immediate power isolation to enhance operator and site safety.

ADVANCED SECURITY

Lockable service doors protect critical components and fuel systems, preventing unauthorised access and enhancing site security.

A keyless push-button start system with password protection enhances machine security while providing fast, convenient access for authorised operators.

Backed by the CESAR Datatag Scheme for proven theft deterrence and equipped with CESAR ECV, these machines allow swift and dependable verification of emissions category.

Advanced anti-theft telematics combines GPS tracking and geofencing to help protect the machine from theft, prevent unauthorised use and provide greater fleet security.

e.vision

SY750H

SERVICE & MAINTENANCE

Designed for optimal uptime, SANY excavators feature wide service doors, clearly accessible service points, and extended service intervals to simplify maintenance and maximise machine availability. Premium, high-quality components consistent throughout the range further enhance durability and reliability, ensuring reliable performance shift after shift.



MAINTENANCE MADE EASY

SANY excavators are engineered for streamlined service and maintenance, with design features that make routine upkeep faster and more efficient.

A wide-opening engine door provides easy access to all key service points, ensuring that daily checks are quick, simple, and easy to perform whilst ergonomic handrails enable safe access to the maintenance platform.

PROTECTED, PREMIUM COMPONENTS

Heavy-duty steel bodywork provides robust protection against on-site damage, safeguarding vital structures and contributing to reduced lifetime ownership costs.

Produced in advanced manufacturing facilities in China, SANY excavators are built for high quality and lasting durability, utilising high-spec components from reputable global manufacturers.

Shared componentry across the range, combined with an extensive European dealer network, ensures rapid response and efficient turnaround for any machine repair.



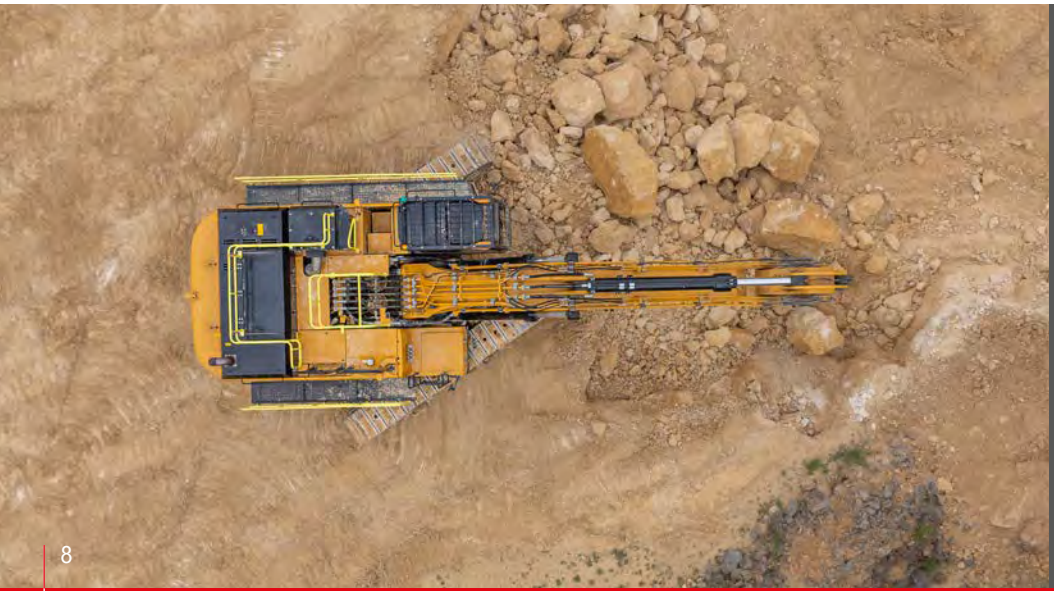

INCREASED WORKING HOURS

With extended 500-hour service intervals, maintenance frequency is reduced, lowering operating costs and improving machine availability.

Real-time health alerts, remote diagnostics, and scheduled maintenance via SANY EVI telematics work together to enhance reliability and extend machine life.

SY750H

ATTACHMENTS

SANY machines offer extended capability through a broad selection of easily interchangeable attachments. This range enables efficient performance across varied tasks such as digging, drilling, land clearing, material handling, and demolition.

BUCKETS

SANY provides a complete range of excavator buckets designed to enhance your machine's efficiency. From general-purpose digging buckets to more specialised options, they enable you to tackle a wide variety of job sites.



QUICK HITCH

Equipped with quick hitches as standard, SANY machines enable rapid attachment changes, helping you get more done in less time. By reducing manual labour and ensuring a secure fit, they expand the machine's versatility and keep your operations running smoothly.

BREAKERS

SANY breakers have been designed to deliver powerful breaking performance, long-lasting durability, and high efficiency. They are suitable for a wide range of applications such as quarry, tunneling, civil construction, trenching, road & landscaping etc.

GRABS

SANY excavator grabs deliver powerful, reliable material handling with high clamping force, smooth hydraulic control and durable steel construction. The result is a cost-effective, high-performance attachment that boosts productivity and control on every job.*

*SANY attachment options may vary depending on country.

SY750H

YOUR UPTIME. OUR PRIORITY.

Rely on SANY's value-added aftermarket services to keep your equipment operating at peak efficiency. From proactive maintenance to reducing unexpected downtime and controlling operating costs, we provide the support your business depends on. Our European service solutions further boost performance, streamline maintenance tasks, and improve profitability across your fleet.

5 YEAR WARRANTY

Built on a global reputation for reliability and durability, SANY excavators come with an unmatched 5-year warranty* – one of the strongest in the industry.

It's a clear statement of the confidence we have in our machines and our commitment to your uptime. Your investment is protected from day one, giving you the assurance that if an issue arises, you're fully covered.

*Terms and conditions apply.

SERVICE AND SUPPORT

SANY's extensive network of certified technicians and dealer partners provides on-site service and technical expertise designed to minimise downtime and maintain peak machine performance.

Working in coordination with our advanced manufacturing facilities in China, our European teams combine global engineering capability with practical local support.

SANY GENUINE PARTS

SANY genuine parts are engineered, rigorously tested, and manufactured to the exact specifications required by your machine. Their precise fit and compatibility guarantee maximum performance and system integrity.

By maintaining correct operational tolerances, they enhance on-site safety and significantly reduce the risk of unplanned failures or downtime. All genuine parts are supported by a 12-month warranty for added assurance.





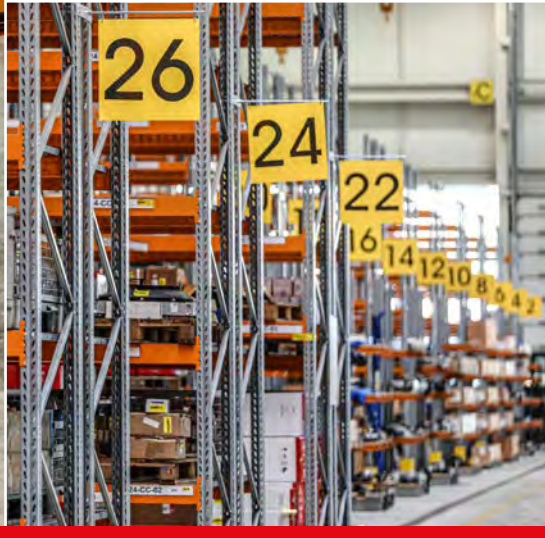

SY750H

INTELLIGENT SUPPORT

SANY's connected tools give you clarity, confidence, and control on every project. ROOTPILOT brings precision to the bucket; EVI Telematics brings visibility to the fleet. Together, they reduce downtime, cut costs, and boost productivity. Smart technology – driving your success.



EVI e.vision

Designed exclusively for Europe, our digital fleet management system EVI gives you complete visibility of your machines whenever and wherever you need it. By simplifying fleet oversight, it enables better decision-making, lowers costs, and improves uptime across your operations. With built-in safety and security features that let you monitor location and usage in real time, you gain greater control and peace of mind.

Key benefits include:

- Enhanced fleet visibility and remote machine management
- Set authorised operating hours and create geofenced security zones to reduce theft risk and misuse
- Greater visibility of routine checks and machine health
- Multi-channel, real-time communication for faster decision-making
- Operating report analysis for smarter, data-led decision-making
- Customer account management for personalised, data-backed communication

SANY ROOTPILOT

SANY ROOTPILOT is a high-precision 3D machine-control system that uses GNSS, IMU sensors, and smart algorithms to guide excavators in real time. It gives operators clear, intuitive 3D feedback for faster, safer, and more accurate digging.

ROOTPILOT installs quickly, works with multiple machines and attachments, and syncs designs through the cloud so every operator works from the same plan. It's ideal for highways, municipal works, and foundation projects where precision is critical.

Available in Fundamental and Premium versions, ROOTPILOT supports everything from basic grading to full 3D model guidance, offsets, layer control, and complex digital designs.

Main customer benefits:

- ±3 cm accuracy for first-time-right excavation
- Avoidance of underground utilities and hazards
- Lower fuel, labour, and rework costs
- Faster production with fewer survey checks
- Works with 2D or full 3D design models
- Boosts operator confidence and consistency

SY750H

SPECIFICATION

ENGINE

Model	Cummins X15
Type	Water-cooled, 6-cylinder, direct injection
Exhaust emissions	Stage V
Rated power	391 kW @ 1,800 rpm
Max. torque	2,373 Nm @1,400rpm
Displacement	14,900 cc

HYDRAULIC SYSTEM

Main pump	2x variable piston pumps with electronic control
Max. oil flow	1008 l/min / 2 x 504 l/min
Travel motor	Axial piston with park brake
Swing motor	Axial piston with swing brake
Max. oil flow (AUX 1)	100 l/min
Max. oil flow (AUX 2)	70 l/min

PERFORMANCE

Swing speed	7.2 rpm
Max. travel speed	4.5 km/h
Max. travel force	546.8 kN
Gradeability	70%/35°
Bucket capacity	5 m^3
Ground pressure	114 kPa
Bucket digging force (ISO)	410 kN
Arm digging force (ISO)	354 kN

SERVICE REFILL CAPACITIES

Fuel tank	940 L
Engine coolant	75 L
Engine oil	40 L
Drive (per side)	16 L
Hydraulic oil tank	680 L

Based on theoretical calculation at max flow with no load.

Subject to alterations.

In the interest of continual equipment development, SANY reserves the right to change these specifications at any time without prior notification.

OPERATING WEIGHT

80,850 kg

Note: Includes 75kg (165 lb) operator, full fuel tank and excludes any attachments or hitch.

UNDER & UPPER STRUCTURE

Boom length	7,000 mm
Arm length	2,800 mm
Bottom rollers	8 (per side)
Top rollers	3 (per side)
Rotation device	Planetary gear reducer driven by an axial piston motor, automatic hydraulic released slewing brake

RELIEF VALVE SETTINGS

Implement circuit	34.3 MPa
Power boost	37.0 MPa
Swing circuit	28.5 MPa
Travel circuit	34.3 MPa
Pilot pressure	3.9 MPa

SOUND LEVEL

Noise level inside cabin	72 dB(A)
Noise guaranteed value	108.7 dB(A)

SY750H

SPECIFICATION

SY750H LIFTING CAPACITIES

Load Point Height (B)		Radius (A)										Digging Reach	
		3.0 m		4.5 m		6.0 m		7.5 m		9.0 m		Max	
													
7.5 m	kg							16937*	16937*			16605*	16605*
6.0 m	kg					31260*	26514*	17778*	17778*	16459*	16459*	16397*	16397*
4.5 m	kg					23021*	23021*	19131*	19131*	16948*	16948*	16394*	13971
3.0 m	kg					25656*	25656*	25656*	25656*	17600*	15061	16492*	13971
1.5 m	kg					27281*	27281*	21560*	21560*	17978*	14725	16694*	13186
Ground line	kg			29459*	29459*	27550*	27550*	21853*	18609*	17978*	14524	16895*	13610
–1.5 m	kg	21665*	21665*	33823*	33823*	26471*	26471*	21120*	21120*			17030*	17030*
–3.0 m	kg	36689*	36689*	29873*	29873*	13825*	23825*	18745*	18745*			16955*	16955*
–4.5 m	kg			23394*	23394*	18491*	18491*					16202*	16202*

1. This capability is calculated according to GB/T 13331, ISO10567 standards.The limiting coefficient of the hydraulic system is 0.87, and the tipping coefficient is 0.75.
2. Marked with * is limited by hydraulic pressure, marked without * is limited by stability.
3. The lifting point is the support hole in front of the bucket rod (excluding the weight of the bucket). If there are additional accessories such as buckets, they should be deducted from the above lifting weight.
4. A- Radius of loading point (m), B- Loading point height (m).

SY750H

SPECIFICATION

DIMENSIONS (TRANSPORT)

		SY750H
A	Transport length	12,879 mm
B	Transport width (extended/retracked)	4,030 / 3,430 mm
C	Height over cabin / ROPS	3,600 mm
D	Upper structure width (with step)	4,479 mm
E	Track width	650 mm
F	Track gauge	3,380 mm
G	Min. ground clearance	892 mm
H	Tail swing radius	4,175 mm
I	Track ground length	4,770 mm
J	Track length	5,986 mm
K	Track height	1,220 mm
L	Height of boom – transport	4,981 mm
	Counterweight clearance	1,355 mm
	Engine cover height	3,160 mm

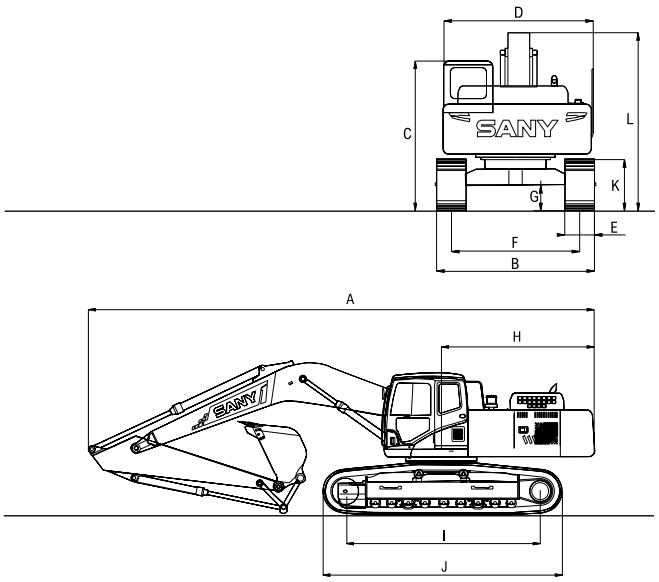

WORKING AREA

		SY750H
A	Max. digging height	11,020 mm
B	Max. dumping height	7,170 mm
C	Max. digging depth	7,580 mm
D	Max. vertical digging depth	3,970 mm
E	Max. digging reach	12,100 mm
F	Min. swing radius	5,390 mm
	Maximum height at minimum swing radius	9,815 mm
	Min. dumping height	3,005 mm

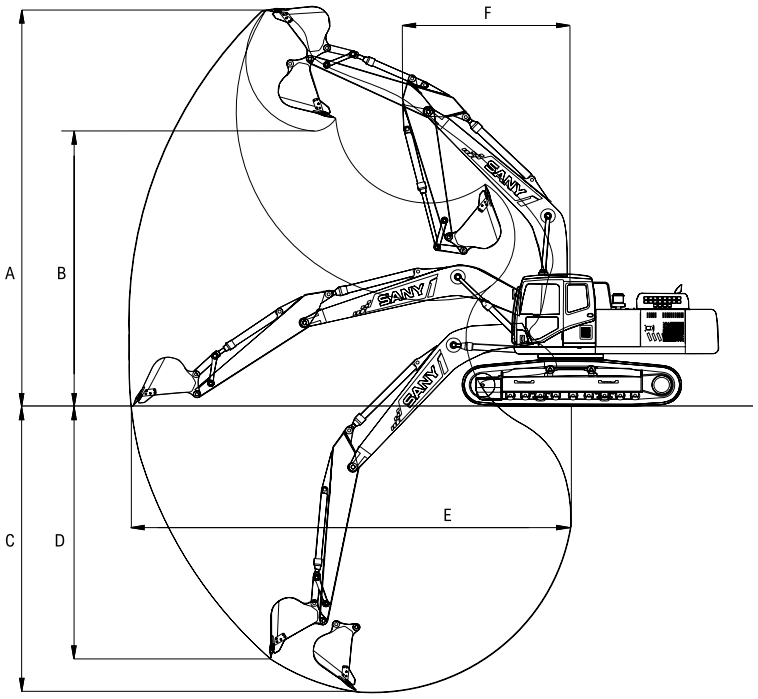

SY750H

STANDARD/OPTIONAL EQUIPMENT

OPERATORS COMFORT / CAB

	SY750H
Heated air suspension seat	•
Automatic heater/air conditioning	•
Bluetooth radio and speaker	•
Adjustable armrests	•
USB charging point	•
Parallel wiper	•
Front sunblind	•
10” Touchscreen display	•
Sky light/roof window	•
AUX 1 on joystick	•
AUX 2 on joystick	•
Integrated cooling box	•
Cup holder	•

WORKING LIGHTS

	SY750H
Lights x 2 – front (LED)	•
Lights x 4 – boom (LED)	•
Lights x 1 – right side (LED)	•

UNDERCARRIAGE

	SY750H
Steel tracks (650mm)	•
Steel tracks (750/900mm)	OPT
Holes / loops for fixing	•

ENGINE

	SY750H
Auto idle	•
Fuel pump	•
Electric re-fueling pump	•

SAFETY

	SY750H
ROPS and FOPS cab	•
Level II OPG Cab Guards	•
Battery master switch	•
Travel alarm	•
Beacon lamp	•
Emergency stop button	•
Retractable seatbelt	•
Seatbelt alarm	OPT
Lockable bonnet	•
Lockable fuel cap	•
Hand rails	•
Side and rear camera	•
360° camera	OPT
All-round mirrors	•
EVI telematics	•

WORKING EQUIPMENT

	SY750H
Boom and arm load holding valves with overload warning	•
Double acting circuit for hydraulic quick coupler with piping	•
Breaker & shear line proportional on joystick with piping	•
Rotation line proportional on joystick with piping	•
Oil flow rate adjustable for attachments	•
Arm - 2,800 mm	•

HYDRAULIC SYSTEM

	SY750H
Swing brake	•
2 speed travel	•
Piping for additional hydraulic function AUX 1	•
Piping for additional hydraulic function AUX 2	•
Hydraulic pre-pressure operating joysticks	•
Main filter	•

The standard and optional equipment can differ depending on the country in which the machine is delivered. Please contact your local dealer for more information.

SANY

FORGING THE FUTURE TOGETHER

SANY HEAVY MACHINERY (UK) LTD
Unit 6, M8 Interlink Estate,
Coatbridge, Glasgow, ML5 4RP
Tel: 0330 2021 318
Email: info@sanyuk.com

Sanyuk.com

Not all products are available in all markets. As part of our continuous improvement process, we reserve the right to modify specifications and designs without giving prior notice. Machines shown may feature additional options other than the standard machine specification.

HEX - SY750H - 09 - 2026 - EU - V1