SANY

Quality Changes the World

HIGH-TECH SOLUTIONS REDEFINED

PERFECTION AS A FOUNDATION.
EFFICIENCY AS A BENCHMARK.

CONSTRUCTION MACHINERY



CRAWLER EXCAVATOR
SY265C

Engine
CUMMINS QSB6.7
Rated power
145 kW / 2000 U/min
Bucket capacity
1.3 m³
Operating weight
27000 kg

SANY

For challenging tasks, you need a first-class partner

Quality comes from experience. And from new ideas. This is why we combine these two crucial factors at SANY. This is because we are one of the world's leading producers, having sold more than **320 000** excavators in **10 years**. This means that you can always rely on sophisticated products that have been tried and tested in practice. An impressive **5–7 %** of our annual turnover is dedicated to research and development.

320 000
EXCAVATORS SOLD IN
10 YEARS

5–7 %
TURNOVER FOR RESEARCH AND DEVELOPMENT

Quality Changes the World







AN ALL-ROUNDER WITH IMPRESSIVE POWER

With the SY265C crawler excavator, we have added a new dimension to the term „flexibility“. Straight from the factory, it is already equipped in such a versatile way that it is ideal for carrying out a wide range of tasks with the relevant attachment devices on all construction sites, whether in road construction, materials handling or demolition work. No matter how the SY265C is used, its stability and power ensure that the required operational movements are performed quickly and safely. Its drive and hydraulics leave nothing to be desired and combine power, reliability and precision for impressive productivity. Just as you would expect from an excavator within this category.

SY265C
HARD FACTS

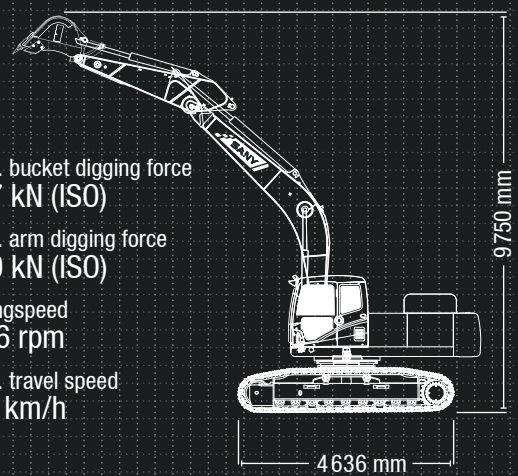

Max. bucket digging force
187 kN (ISO)

Max. arm digging force
130 kN (ISO)

Swingspeed
10.6 rpm

Max. travel speed
5.5 km/h

TOP PROPERTIES

ECONOMY

SETS NEW STANDARDS FOR PRODUCTIVITY

Power is not enough on its own. To ensure that work is economical, you must be able to use power where it is needed in a targeted way. For the SANY SY265C, this ability is ensured by the fact that it is easy and precise to operate and has maximum stability. In addition, its hydraulic system has a sophisticated structure, which ensures that power is transferred efficiently for all work.

QUALITY

Robust and durable – in tough construction site conditions, the SY265C is in its element. Its undercarriage and solid boom provide an exemplary level of stability, even when working at full power. The seams are welded with high precision and ensure that the excavator has a long service life.

DIMENSIONS

Agile power – the SY265C works through its programme quickly and with great power. This excavator has great power reserves in its 27 tonnes. The machine is mounted on a stable HD undercarriage so that it can be used to the full.

USER EXPERIENCE

Extremely comfortable – from the clearly arranged fittings to the comfortable seat and the ergonomically designed controls, drivers can look forward to maximum comfort.



SAFETY

Safety first – the standard safety package includes safety valves as well as a camera for monitoring the working area to the rear. The camera helps the driver to move the vehicle safely and efficiently, even if it is not possible to have an overview of the situation.

COMPONENTS

Pure power – the tried-&-tested Cummins engine unit and the reliable Kawasaki hydraulic system guarantee high performance, particularly when full power is required.

ECONOMY

Where efficiency meets power – the efficient management of the engine and hydraulic system makes sure that all of the components interact optimally. This minimises consumption and lowers costs every time the excavator is used.



SAFETY

Protection for people and machines

With the SY265C, safety measures are considered before the excavator is even started up. To ensure that people, machines, tools and constructions are protected as optimally as possible, the standard equipment includes a safe route up to the cab, as well as handrails and anti-slip tread surfaces on the platform. This means that you are always on the safe side when carrying out maintenance work. The rear camera and safety valves are also supplied as standard.





ECONOMY

Where cost-effectiveness meets power

The SANY SY265C is multifaceted when it comes to cost-effectiveness. This includes its sensationally low fuel and AdBlue consumption. The precise interplay between low engine speeds and hydraulic power which is optimally set to requirements provides the best fuel efficiency for every application.

The entire machine can also be precisely adapted to the requirements of each task by using the selectable operating modes. This means that you can achieve the optimum cost-effectiveness for your machine virtually at the touch of a button. Together with the sophisticated maintenance concept, this is the key to impressively low operating costs.

USER EXPERIENCE

COMFORT THAT TOUGH GUYS APPRECIATE



The driver‘s cab has an impressive number of added benefits related to comfort. It is extensively insulated and minimises noise, vibrations and dust.

The driver‘s most important items can be kept in two storage compartments behind the seat; one of which is chilled. The air suspension driver‘s seat with a high seat backrest and individual adjustment options protects the driver‘s back during a long working day and prevents them from becoming fatigued. The heated seat supplied as standard is a pleasant feature on cold days.

The panoramic view provides a clear outlook for the working day ahead. The large front, side and rear windows give drivers optimum visibility in all directions. An automatic climate control system, a radio with a USB port and 12 V sockets are also supplied on board as standard.







QUALITY

Good reasons to be into heavy metal

The machines have a great deal of work to do during their tough day-to-day work on construction sites. This is why – from the design stage, to selecting the materials used, machining and conducting the final checks – all excavators by SANY are designed to be robust. For instance, all of the welded seams are computer-controlled by robots. This ensures stability and reliability. In addition, the robust, wide heavy-duty undercarriage provides a high level of stability. This allows the SY265C to optimally apply its power. Also good to know: All of the access panels are only made from metal.

USER EXPERIENCE

There is no more sensitive way to control power

Working precisely is the key to greater cost-effectiveness and satisfied customers. The ergonomic joystick levers apply the required movements in a particularly sensitive way, immediately and with pinpoint accuracy.





USER EXPERIENCE

For an even better overview

All of the important information for the driver is shown clearly on the large multifunctional monitor. This prevents the excavator from being operated incorrectly and increases the operating speed.



SANY PLUS ADVANTAGES

Our highlights – the added benefits SANY offers you:

- ✚ Heavy-duty undercarriage
- ✚ Fast, powerful hydraulics
- ✚ A clear overview of instruments and display
- ✚ High-quality welded seams
- ✚ Extensive safety equipment
- ✚ A comfortable driver‘s cab
- ✚ ROPS/FOPS-certified

DIMENSIONS

ALWAYS STAY STEADY

Combined with the SY265C‘s high mass, its particularly stable heavy-duty undercarriage provides the greatest possible stability. Its integrated reinforcements and the use of robust, high-strength steel ensure minimal wear, even when used continually under the maximum load. The steel chains used also offer the best quality standard – for secure stability on any surface.



TECHNICAL SPECIFICATIONS

ENGINE

Model	CUMMINS QSB6.7
Type	Water-cooled, 6 cylinder, with commonrail and Adblue
Exhaust emissions	Stage V
Rated power	145 kW / 2000 rpm
Max. torque	1472 Nm / 1400 rpm
Displacement	6700 ccm
Batteries	2 × 12 V / 120 Ah

HYDRAULICSYSTEM

Mainpump	2 x variable-piston-pump with electronic positive control
Max. oilflow	2 x 260 l/min
Travelmotor	2 speed axial piston motor with planetary reducer and automatic multi-disc brake
Swingmotor	Axial piston motor with planetary reducer and automatic holding brake

RELIEF VALVE SETTINGS

Implement circuit	343 bar
Power boost	373 bar
Swing circuit	290 bar
Travle circuit	343 bar
Pilot pressure	39 bar

SERVICE REFILL CAPACITIES

Fuel tank	465 l
Engine coolant	40 l
Engine oil	27 l
Drive (per side)	7.8 l
Adblue	38 l

PERFORMANCE

Swingspeed	10.6 rpm
Max. travel speed	High 5.5 km/h, slow 3.7 km/h
Max. travel force	227 kN
Gradeability	35°
Bucket capacity	1.3 m³
Groundpressure	39.3 kpa
Bucket digging force ISO	187 kN
Arm digging force ISO	130 kN

UNDER AND UPPER STRUCTURE

Boom length	5900 mm
Arm length	2950 mm
Bottomrollers	9
Toprollers	2
Rotation device	Planetary gear reducer driven by an axial piston motor, automatic hydraulic released slewing brake

OPERATING WEIGHT

SY265C 27000 kg

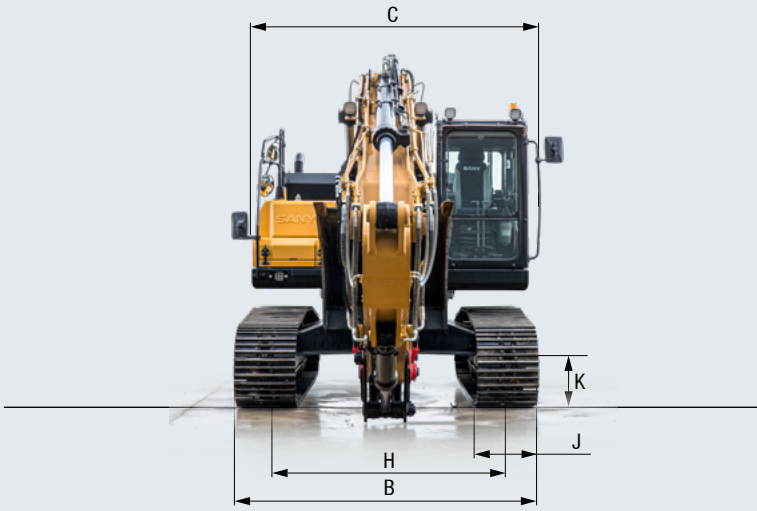

LIFTING CAPACITIES *

Load point height		Radius 3.0 m / 10.0 ft		Radius 4.5 m / 15.0 ft		Radius 6.0 m / 20.0 ft		Radius 7.5 m / 25.0 ft		Max. digging reach Capacity		m/ft
7.5 m	kg					5981	5981			6000	6000	6.15
25.0 ft	lb					13186	13186			13228	13228	20.19
6.0 m	kg					6083	6083	5775	5673	5670	5640	7.53
20.0 ft	lb					13411	13411	12732	12507	12500	12434	24.66
4.5 m	kg					6242	6242	5838	5682	5665	5010	8.10
15.0 ft	lb					13761	13761	12870	12527	12489	11045	26.62
3.0 m	kg			9459	9459	7856	7502	6724	5385	6121	4621	8.40
10.0 ft	lb			20853	20853	17319	16539	14824	11872	13494	10187	27.58
1.5 m	kg			11713	10834	8870	7118	7037	5191	5949	4429	8.50
5.0 ft	lb			25822	23885	19555	15692	15514	11144	13115	9764	27.85
Ground line	kg			12789	10477	9541	6859	6892	5049	6114	4527	8.26
	lb			28195	23098	21034	15121	15194	11131	13479	9980	27.08
-1.5 m	kg	11091	11091	13080	10367	9574	6879	6953	5108	6703	4982	7.75
-5.0 ft	lb	24451	24451	28836	22855	21107	15165	15329	11261	14777	10983	25.47
-3.0 m	kg	17705	17705	12543	10457	9339	6924			7931	5867	6.91
-10.0 ft	lb	39032	39032	27652	23054	20589	15256			17485	12934	22.68
-4.5 m	kg	15261	15261	10814	10766					8623	8065	5.51
-15.0 ft	lb	33644	33644	23841	23735					19010	17780	18.09

*at 700 mm track pads width

DIMENSIONS (TRANSPORT)

A	Transport length	10290 mm
B	Transport width	*3290 mm
C	Upperstructure carriage	3045 mm
D	Height over cabin/ROPS	3080 mm
E	Height of Boom – transport	3195 mm
F	Overall length of crawler	4636 mm
G	Tail length	3105 mm
H	Track gauge	2490 mm
I	Track height	945 mm
J	Track pads width	700 mm 600 mm 800 mm
K	Min. ground clearance	470 mm
L	Counterweigth clearance	1045 mm
M	Engine cover height	2640 mm
N	Tail swing radius	3105 mm
O	Center distance of tumblers	3833 mm

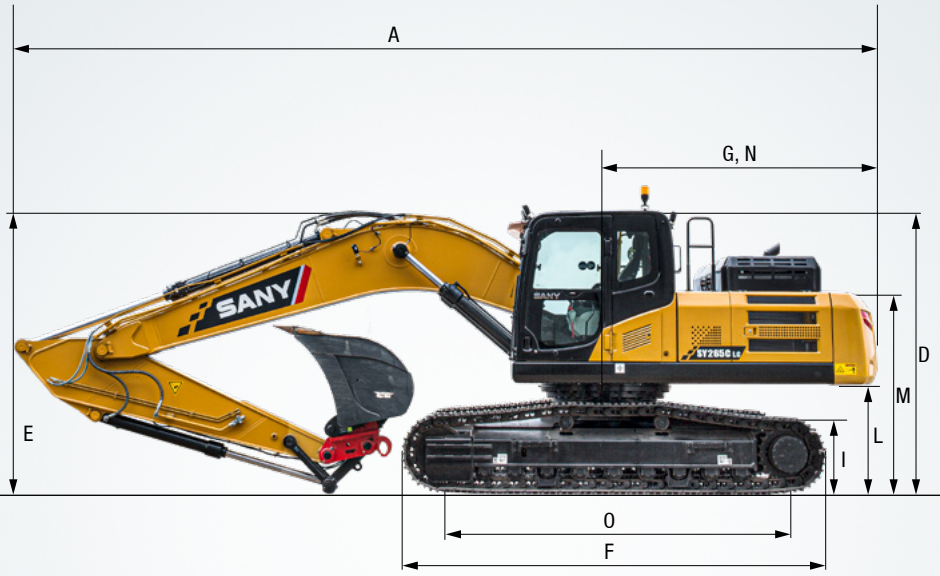

* at 700 mm track pads width

WORKING AREA

A	Max. digging reach	10225 mm
B	Max. digging depth	6705 mm
C	Max. digging height	9745 mm
D	Max. dumping height	6715 mm
E	Min. dumping height	2490 mm
F	Max. vertical digging depth	5675 mm
G	Overall height over arm by min. swing radius	8020 mm
H	Min. swing radius	3800 mm

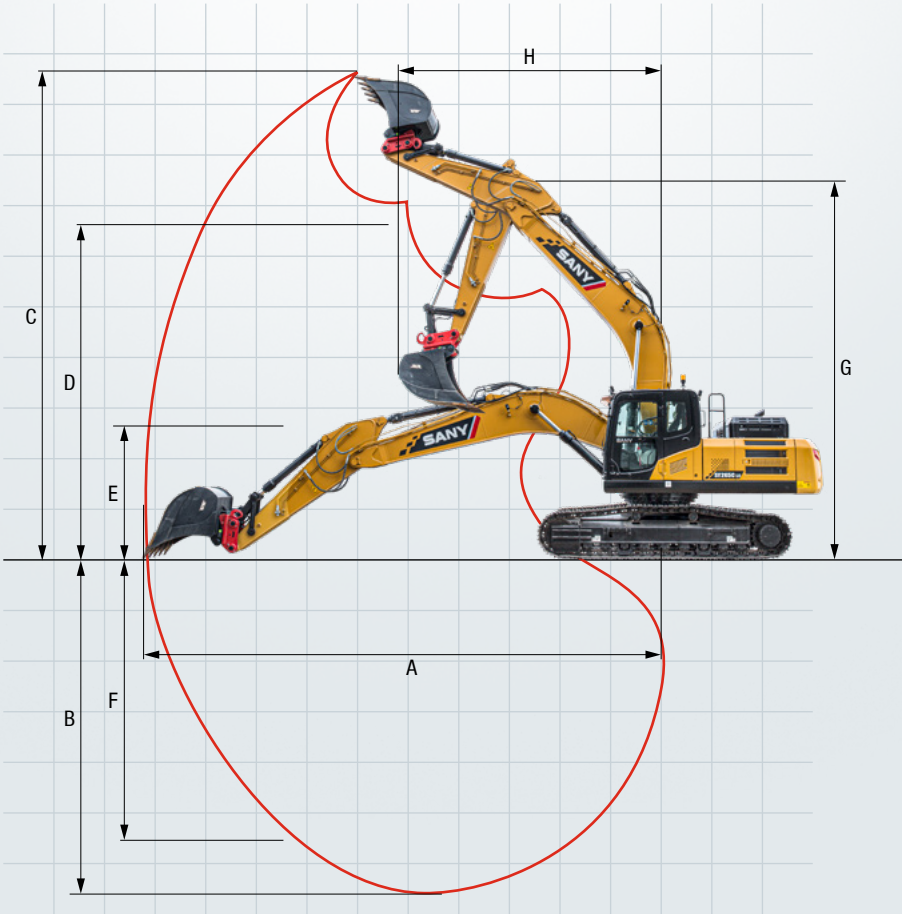

The all-inclusive excavator

Thanks to its extensive range of equipment, the SY265C perfectly meets the ever-growing demands for an efficient crawler excavator in the medium category. It offers a comfortable and productive workstation, with unique performance and excellent extra features included as standard.



OPERATORS COMFORT / CAB

Heater	●
Automatic air conditioning C/H	●
Radio and speaker	●
Armrests (adjustable)	●
Airsuspension seat	●
Heated seat	●
Wiper	●
Sprayer f. wiper	●
AUX 1 on Joystick	●
AUX 2 on Joystick	●
Removable front-window	●
Sky light openable	●
Integrated cooling box	●

WORKING EQUIPMENT

Boom and arm load holding valves with overload indicator	●
Double acting circuit for hydraulic quick coupler with piping	●
Breaker&Shear line proportional on Joystick with piping	●
Rotation line proportional on Joystick with piping	●
Rotation line on Joystick with piping	●
Flow adjustment for attachments	●

UNDERCARRIAGE

Steel tracks 700	●
Steel tracks 600	○
Steel tracks 800	○
Holes/loops for fixing	●

WORKING LIGHTS

Lights – front (LED)	●
Lights – boom (LED)	●
Lights – platform (LED)	●
Lights – back (LED)	●

ENGINE

Auto idle	●
Diesel filter	●
DOC	●

HYDRAULIC SYSTEM

Swing brake	●
2 speed travel	●
Piping for additional hydraulic function AUX 1	●
Piping for additional hydraulic function AUX 2	●
Hydr. Pre-pressure operating joysticks	●
Mainfilter	●

SAFETY

Battery master switch	●
Travel Alarm	●
Warning beacon	●
Camera (Rear & Side)	●
Handrails	●
Lockable hoods	●
Lockable fuel cap	●

Standard equipment ● Special option ○

The standard and special options differ depending on the country in which the crawler excavator is delivered. If you have any questions, please contact your dealer directly.

Parts supply – quick and reliable

With the purchase of a SANY crawler excavator you have made an investment in the future. Fast availability of spare parts is your guarantee of minimal downtimes and failure times.



A SERVICE YOU CAN RELY ON

Just as we do with our excavators, we also demand high quality and reliability of our service products. This underlines our equipment's performance in terms of their durability and their excellent price-performance ratio. After all, maintenance is crucial for efficiency, cost-effectiveness and safety. Your SANY dealer is happy to help you with a comprehensive range of services to ensure that your machine continues operating efficiently in the long term.

SANY – flexible, fast and always there for you

Rapid assistance, tailored advice and a reliable supply of original parts – that is what we mean by a premium service.



* To locate your nearest dealer, visit https://www.sanyuk.com.

SANY PLUS ADVANTAGES

The added benefits SANY offers you:

- ✚ Experienced dealer network throughout England, Wales, Northern Ireland and Ireland
- ✚ Direct sales and support route in Scotland
- ✚ Dedicated SANY team based in the UK to support you and your product
- ✚ UK office and parts warehouse to ensure SANY excavators are fully supported

Detailed information in black and white

Handbooks and documents are available for all SANY crawler excavators, and these can help you with operation, maintenance, servicing and repairs. These include operating and maintenance instructions and technical specifications.



HIGHLIGHTS **SY265C**

COMPACT POWER FOR VERSATILE USE

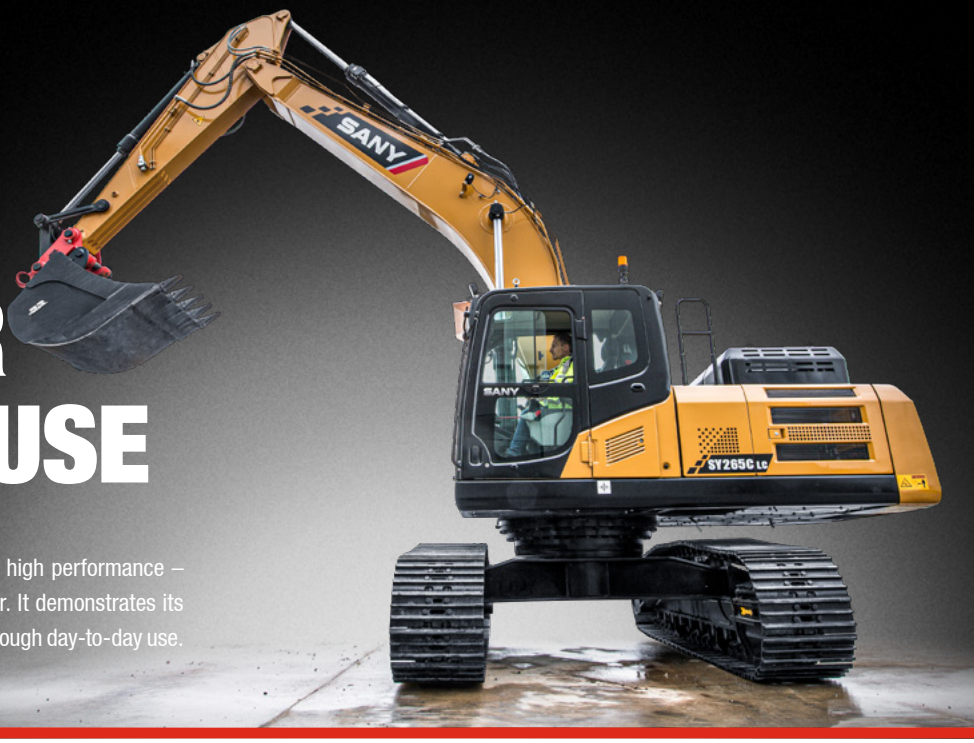

The SANY SY265C embodies reliable and fuel-efficient high performance – perfectly housed in a compact, robust crawler excavator. It demonstrates its impressive cost-effectiveness and great versatility in its tough day-to-day use.

ROBUST AND DURABLE

The **robust design of the reinforced undercarriage** easily withstands vibrations and high workloads. The boom, with its one-piece design and **precise welded seams,** also stands out thanks to its **stability** and optimum load distribution.

EXTREMELY COMFORTABLE

You always need to be fully focused when working on construction sites. From the **air-suspension comfortable seat** to the **automatic climate control system** and the **spacious footwell** to the **precise steering** via the joystick, the workstation in the SY265C provides machine operators with the best conditions to stay fully concentrated.

SAFETY FIRST

We have taken all possible measures to minimise the risk to drivers in the cab and people in the vicinity of the machine. From the optimal panoramic view, which includes a **rear camera**, to the handrails and **anti-slip tread surfaces**, we are playing things safe.

AGILE POWER

The stable **heavy-duty undercarriage** and the high mass provide the SY265C with the stability required to make **quick and powerful operational movements**. The excavator can therefore even tackle comprehensive tasks in a short time.

PURE POWER

Together with the renowned Kawasaki hydraulic system, the strong six-cylinder Cummins QSB6.7 engine with AdBlue emission control **reliably delivers high performance**. The hydraulic pump is always operated in such a way that **precisely the oil quantity required** is made available. This results in outstandingly high efficiency at the lowest possible engine speed.

WHERE EFFICIENCY MEETS POWER

In conjunction with the electronic fuel injection, the autothrottle function adjusts the engine speed to the power required. This means that the smart hydraulic system **reduces** the **fuel consumption**, **engine wear** and **exhaust emissions**.

TECHNICAL HIGHLIGHTS

Engine	CUMMINS QSB6.7
Rated power	145 kW / 2000 rpm
Max. torque	1472 Nm / 1500 rpm
Max. travel speed	5.5 km/h
Swingspeed	10.6 rpm
Mainpump	2 x variable-piston-pump with electronic positive control
Max. oilflow	2 x 260 l/min

Not all products are available in all markets. As part of our continuous improvement process, we reserve the right to modify specifications and designs without giving prior notice. The figures may contain additional options.

SANY

Quality Changes the World

SANY HEAVY MACHINERY (UK) LTD
info@sanyuk.com
www.sanyuk.com

HEX - SY265 - 0202 - 10 - EN - V1.1