SANY

Quality Changes the World

READY FOR ANY TERRAIN

PRECISE POWER. CONSTANT RELIABILITY.

CONSTRUCTION MACHINERY



MOBILE EXCAVATOR SY155W

Engine
DEUTZ TCD4.1 L4
Rated Power
115 kW / 2000 rpm
Bucket capacity
0.6 m³
Operating mass
15 000 kg

SANY

For challenging tasks, you need a first-class partner

Quality comes from experience. And from new ideas. This is why we combine these two crucial factors at SANY. This is because we are one of the world's leading producers, having sold more than **320 000** excavators in **10 years**. This means that you can always rely on sophisticated products that have been tried and tested in practice. An impressive **5–7 %** of our annual turnover is dedicated to research and development.

SY155W
HARD FACTS

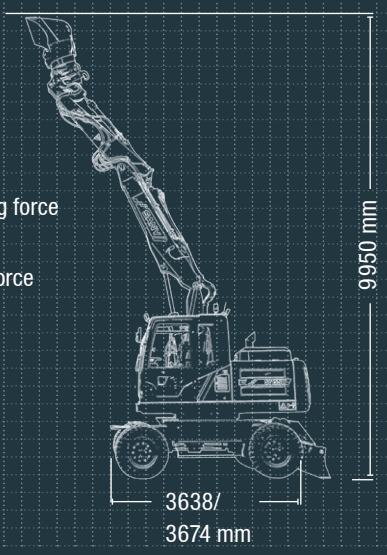

Max. bucket digging force
87 kN (ISO)

Max. arm digging force
64 kN (ISO)

Swingspeed
10.5 rpm

Max. travel speed
20 km/h

320 000
EXCAVATORS SOLD IN
10 YEARS

5–7 %
TURNOVER FOR RESEARCH AND DEVELOPMENT

Quality Changes the World





MOBILE VERSATILITY RE-DEFINED

When it comes to mobility, SANY SY155W is unrivalled, both on the construction site and over short distances from one construction site to the next. There is therefore no need for an additional means of transport, thereby eliminating loading time. This means that the mobile excavator requires considerably less time and personnel. This is ideal for inner-city areas and a wide variety of applications, from civil engineering and earth moving to pipe laying. It can even demonstrate its strengths in garden- and landscaping work.



ECONOMY

A MOBILE POWERHOUSE

When you need an excavator that can change locations quickly, the SY155W is the perfect choice. It lives up to its name as a mobile excavator– not only on the construction site when going from one task to the next, but also over short distances between two construction sites, meaning there is no need for an additional means of transport. This makes it ideally suited for use in urban areas, where it comes into its own thanks to its compact dimensions.

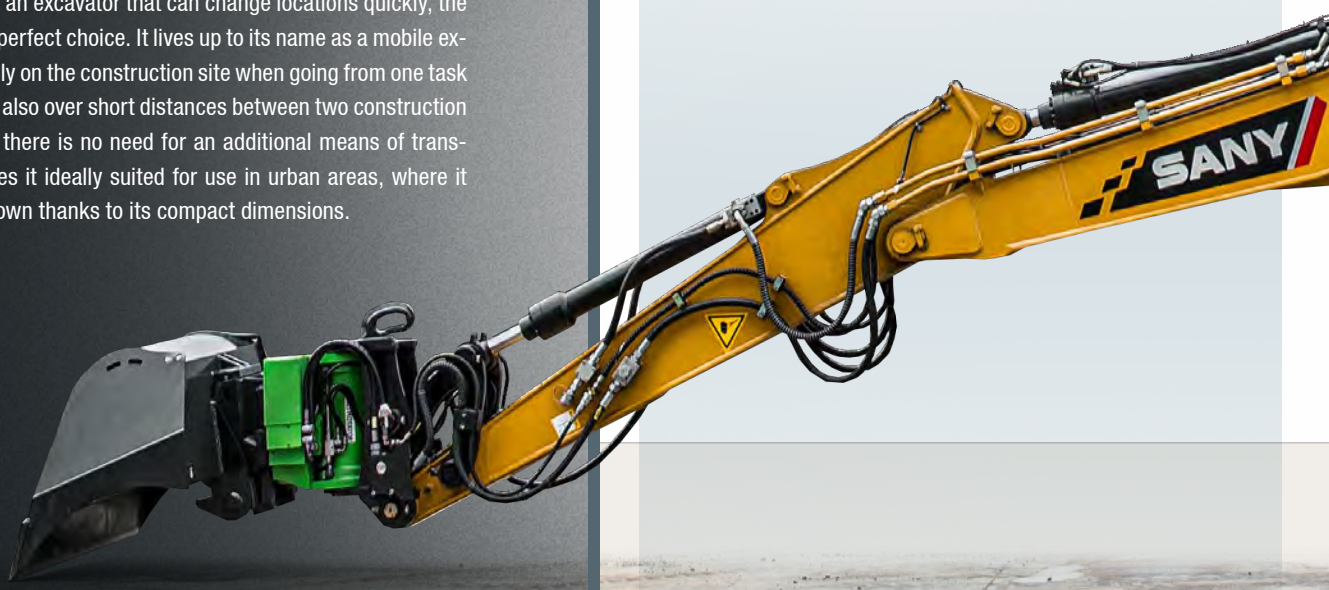

QUALITY

For the toughest conditions –
Pin point welded seams, executed by highly-precise welding robots, ensure stability and power in the long term.

SAFETY

Protection for both people and machines –
From its stable, non-slip hand rails to its large mirrors and camera, the safety package ensures that your construction site runs without a hitch every day.



DIMENSIONS

Manoeuvrability and flexibility

The SY155W's adjustable boom broadens the scope of application and increases operational flexibility. This boom enables the work area to be adapted according to your requirements, from a longer distance to close up. It is now also possible to lift loads vertically in the immediate vicinity of adjoining buildings. Naturally, all transport dimensions have been maintained, so that the machine can move with road traffic easily and safely. In combination with its large steering angle, the machine can always be brought perfectly to its working position on the construction site.

DIMENSIONS

Extremely agile – The adjustable boom enhances its flexibility and reach even with compact dimensions. Even when excavating vertically with attachments or workpieces, the excavator can work with particular precision in tight spaces.

USER EXPERIENCE

Comfortable all-round – With its modern interior, the cab provides the best conditions for concentrated and productive work.



COMPONENTS

Inner values– With the SY155W, quality is guaranteed right down to the fine details – from the ZF gearbox and the Bosch Rexroth hydraulics to the Deutz engine.

ECONOMY

Price and performance – The SY155W offers an impressive price-performance ratio that quickly pays off. On every construction site, the compact all-rounder shows what true cost-effectiveness looks like.

DIMENSIONS

Stability in every situation

The robust undercarriage ensures stable driving and guarantees exact and fast manoeuvring on the construction site. Its stability and high-quality design allow it to prove its strength safely, for example during excavation work. Where necessary, the dozer blade provides additional stability. Naturally, the machine also has stabilisers on its axes, increasing the tilt stability even when working over the sides.





USER EXPERIENCE

With built-in maintenance benefits

We can‘t change the fact that machines need maintenance. That‘s why we‘ve reduced maintenance requirements, resulting in less downtime. The maintenance-friendly overall concept of the SY155W starts with the robust, wide-opening engine bonnet and the easy accessibility of all relevant components. The filter, radiator and battery are arranged centrally and can therefore be accessed easily and quickly. This guarantees not only full performance and reliability, but also the long service life of all components.

USER EXPERIENCE

CONTROL FULL POWER WITH SENSITIVITY

All of the important controls on the SY155W are positioned perfectly throughout the cab. From the easy to use joystick control to the large multifunction display, on which all important data is clearly laid out in a simple system. The menu navigation is extremely user-friendly and enables the driver to manage machine functions safely and comfortably, for example, checking current pressure levels. The monitor also displays the next inspection due and basic data such as oil and cooling water temperatures and torque. Changing attachment devices is particularly easy; the quick change-over can also be directly selected in the system. The angle of the steering column can also be comfortably adjusted.





USER EXPERIENCE

A comfortable working environment

The cabin of the SY155W has only one task – to make working on the construction site as pleasant, comfortable and safe as possible for the driver. The ergonomically positioned controls and the comfortable, air-suspension driver's seat with numerous individual adjustment options are part of this. The automatic climate control and powerful ventilation and heating ensure that the temperature and fresh air levels in the cab are always perfect. A radio and large storage compartments are also supplied on board as standard. Naturally, the direction of travel can be changed easily using a switch integrated into the joystick.

Our highlights – the added benefits SANY offers you:

- ✚ Adjustable boom
- ✚ Comfortable air-suspension seat
- ✚ Modern LED lighting
- ✚ Clear instruments and a large, high-resolution colour display
- ✚ High safety standards (support cylinders on the axes, camera etc.)
- ✚ Large storage compartments

SANY PLUS ADVANTAGES



QUALITY

Protecting all that's important to you

The foundation of the SANY excavator's durability and robustness is its sophisticated design and selected high-quality materials. And, of course, its robust build. The welded seams, for instance, are executed by robots with a high degree of precision. This guarantees maximum load-bearing capacity and a long service life.

You can always rely on a clean, well thought-out hydraulic system.

SAFETY

Everything within reach and in sight

All the controls are clear and positioned directly within the driver's reach. This ensures not only optimum comfort, but also maximum safety thanks to precise operation. In addition, the driver has a complete overview of the working and slewing area in all situations. The cleverly built cab structure ensures this excellent overview, in conjunction with the camera supplied as standard.



TECHNICAL SPECIFICATIONS

ENGINE

Model	DEUTZ TCD4.1 L4
Typ	Water-cooled, 4 cylinder, with commonrail and Adblue
Exhaust emissions	Stage V
Rated power	115 kW / 2000 rpm
Max. torque	609 Nm / 1600 rpm
Displacement	4.1l
Batteries	2 × 12V / 120 Ah

SERVICE REFILL CAPACITIES

Fuel tank	240 l
Engine coolant	26 l
Engine oil	11.5 l
Adblue	20 l
Hydraulic oil tank	175 l

PERFORMANCE

Swingspeed	10.5 rpm
Max. travel speed	High 20 km/h, slow 7 km/h
Max. travel force	89 kN
Gradeability	35°
Bucket capacity	0.6 m³
Groundpressure	0.38 / 0.50 kg/cm²
Bucket digging force ISO	87 kN
Arm digging force ISO	64 kN

RELIEF VALVE SETTINGS

Implement circuit	320 bar
Swing circuit	250 bar
Travle circuit	360 bar
Pilot pressure	39 bar

HYDRAULIC SYSTEM

Mainpump	1 x variable-piston-pump with loadsensing control
Max. oilflow	250 l/min
Max. oilflow (AUX 1)	100 l/min
Max. oilflow (AUX 2)	100 l/min
Travelmotor	Variable displacement axial piston motor
Swingmotor	Axial piston motor

UNDER AND UPPER STRUCTURE

Boom length	1930 mm + 3100 mm
Arm length	2500 mm
Rotation device	Planetary gear reducer driven by an axial piston motor, automatic hydraulic released slewing brake

OPERATING WEIGHT

SY155W	15000 kg

* Includes 75 kg (165 lb) operator and full fuel tank and excludes bucket.

TYRES

Dimensions	10.00 - 20 - 16PR

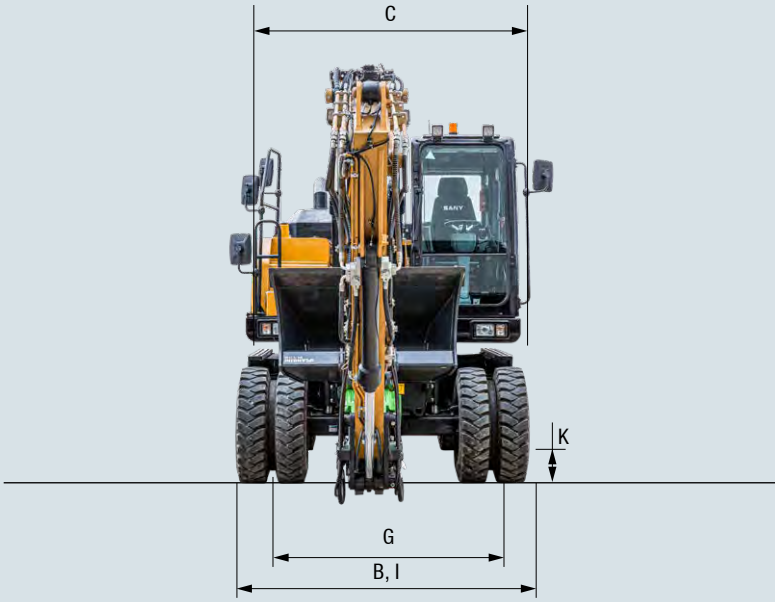

LIFTING CAPACITIES OF BLADE

Load point heigh		Radius 3.0 m		4.5 m		6.0 m		7.5 m		Digging reach max.		
												mm
7,5 m	kg	-	-	*3630	*3630	-	-	-	-	*3840	*3800	4952
6,0 m	kg	-	-	*3410	*3410	3340	*3520	-	-	3030	*3620	6327
4,5 m	kg	-	-	*3980	*3980	3310	*3620	-	-	2490	*3590	7121
3,0 m	kg	*6730	*6730	4920	*4990	3200	*4040	2270	*3630	2180	*3700	7526
1,5 m	kg	8900	*9190	4640	*6070	3080	*4510	2230	*3750	2260	*3790	7609
0 m	kg	8530	*9550	4490	*6590	*4800	*4800	-	-	2260	*3790	7379
-1,5 m	kg	8600	*9600	4470	*6480	2990	*4690	-	-	2540	*3870	6806
-3,0 m	kg	6450	*8880	4560	*5580	-	-	-	-	-	-	-

LIFTING CAPACITIES OF BLADE & STABILIZER

Load point heigh		Radius 3.0 m		4.5 m		6.0 m		7.5 m		Digging reach max.		
												mm
7,5 m	kg	-	-	*3630	*3630	-	-	-	-	*3840	*3800	4952
6,0 m	kg	-	-	*3410	*3410	3340	*3520	-	-	3030	*3620	6327
4,5 m	kg	-	-	*3980	*3980	3310	*3620	-	-	2490	*3590	7121
3,0 m	kg	*6730	*6730	4920	*4990	3200	*4040	2270	*3630	2180	*3700	7526
1,5 m	kg	8920	*9190	4640	*6070	3080	*4510	2230	*3750	2260	*3790	7609
0 m	kg	8530	*9550	4490	*6590	*4800	*4800	-	-	2260	*3790	7379
-1,5 m	kg	8600	*9660	4470	*6480	2990	2990	-	-	2540	*3870	6806
-3,0 m	kg	8810	*8880	4560	*5580	-	-	-	-	-	-	-

DIMENSIONS

A	Transport length	8200 mm
A‘	Transport length in drivemode	6180 mm
B	Transport width	2600 mm
C	Upperstructure width	2600 mm
D	Height over cab	3200 mm
E	Transport height	3200 mm
E‘	Transport height in drivemode	4000 mm
F	Tail length	2030 mm
G	Track gauge	1944 mm
H	Undercarriage width (blade)	2550 mm
I	Horizontal distance to blade	2200 mm
J	Blade height	515 mm
K	Minimum ground clearance	360 mm
L	Counterweight clearance	1230 mm
M	Engine cover height	2616 mm
N	Tail swing radius	2030 mm
0	Center distance of tumblers	2600 mm

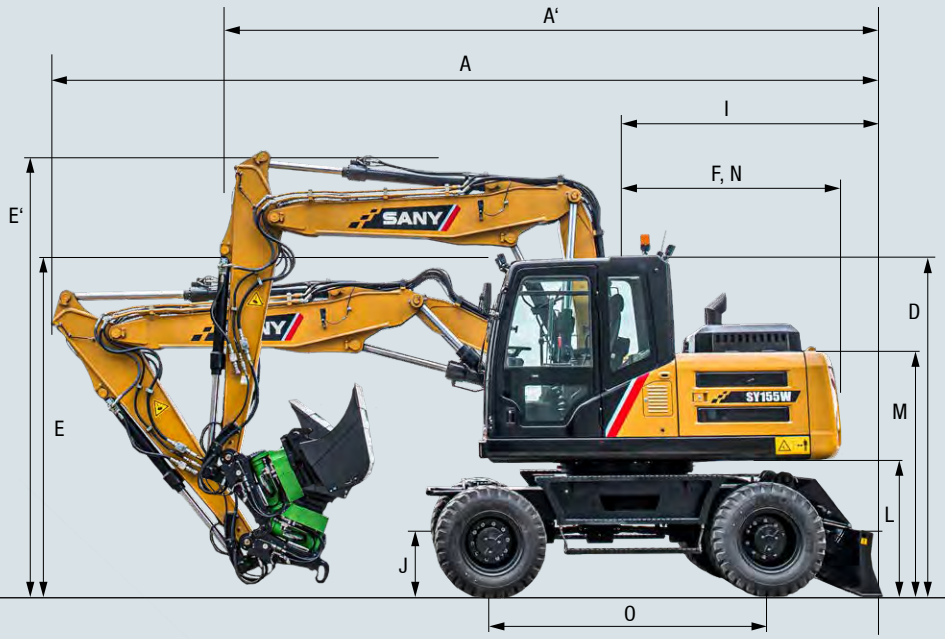

OPERATING RANGE

A	Max. digging reach	8900 mm
B	Max. digging depth	5400 mm
C	Max. digging height	9950 mm
D	Max. dumping height	7200 mm
E	Min. dumping height	-
F	Max. vertical digging depth	4500 mm
G	Overall height over arm by Min. swing radius	7324 mm
H	Min. swing radius	-
I	Max. clearance when blade up	472 mm
J	Max. depth of blade down	167 mm

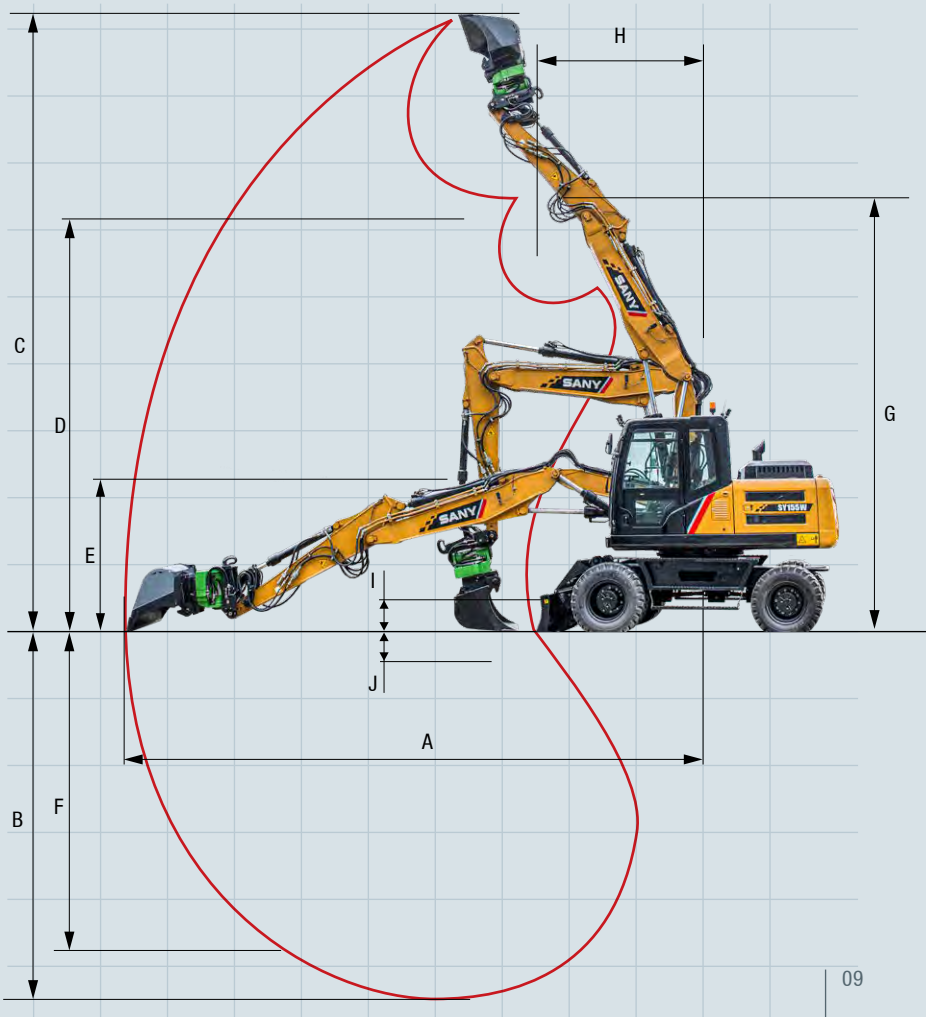



Ready for any challenge

Its extensive standard equipment makes the SY155W a perfect partner to tackle everyday challenges on the construction site. Optional extra equipment and attachment devices are also available to increase its flexibility even more.

OPERATORS COMFORT / CAB

Airsuspension seat	●
Automatic air conditioning C/H	●
Radio and speaker	●
Armrests (adjustable)	●
12v outlets	●
AUX 1 on Joystick	●
AUX 2 on Joystick	●
Adjustable steering column	●

WORKING EQUIPMENT

Boom and arm load holding valves with overload indicator	●
Double acting circuit for hydraulic quick coupler with piping	●
Breaker&Shear line proportional on Joystick with piping	●
Rotation line proportional on Joystick with piping	●
Flow adjustment for attachments	●
Changeover of bucket cylinder prepared	●
2 piece - boom	●
Dozer blade	●

UNDERCARRIAGE

Holes/loops for fixing	●
Toolbox	●

SAFETY

Battery master switch	●
Travel Alarm	●
Warning beacon	●
Camera	●
Lockable hoods	●

WORKING LIGHTS

Lights - front (LED)	●
Lights - boom (LED)	●
Lights - platform (LED)	●
Lights - back (LED)	●

ENGINE

Auto idle	●
DOC	●
DPF	●
Diesel filter	●

HYDRAULIC SYSTEM

Axle stabilizers	●
piping for additional hydraulic function AUX 1	●
piping for additional hydraulic function AUX 2	●
Swing brake	●
Mainfilter	●

Standard equipment ● Special option ●

The standard and special options differ depending on the country in which the compact excavator is delivered. If you have any questions, please contact your dealer directly.

Parts supply – quick and reliable

With the purchase of a SANY mobile excavator you have made an investment in the future. Fast availability of spare parts is your guarantee of minimal downtimes and failure times.



A SERVICE YOU CAN RELY ON

Just as we do with our excavators, we also demand high quality and reliability of our service products. This underlines our equipment's performance in terms of their durability and their excellent price-performance ratio. After all, maintenance is crucial for efficiency, cost-effectiveness and safety. Your SANY dealer is happy to help you with a comprehensive range of services to ensure that your machine continues operating efficiently in the long term.

SANY – flexible, fast and always there for you

Rapid assistance, tailored advice and a reliable supply of original parts – that is what we mean by a premium service.



* To locate your nearest dealer, visit https://www.sanyuk.com.

SANY PLUS ADVANTAGES

The added benefits SANY offers you:

- Experienced dealer network throughout England, Wales, Northern Ireland and Ireland
- Direct sales and support route in Scotland
- Dedicated SANY team based in the UK to support you and your product
- UK office and parts warehouse to ensure SANY excavators are fully supported

Detailed information in black and white

Handbooks and documents are available for all SANY mobile excavators, and these can help you with operation, maintenance, servicing and repairs. These include operating and maintenance instructions and technical specifications.



HIGHLIGHTS **SY155W**



ENHANCED MOBILITY FOR YOUR PRODUCTIVITY

The SY155W demonstrates how strong performance can take to the road reliably and safely. The compact mobile excavator is an all-rounder boasting exemplary productivity. During civil engineering, horticulture and landscaping work and on urban construction sites, it proves itself to be a flexible workhorse anywhere, working not only with strength but also precision. The sensitive joystick control and the adjustable boom, as well as the well-coordinated brand-name components also have their part to play in this.

ROBUST AND DURABLE

Robustness is essential for tough everyday conditions on the construction site. You can therefore put your trust in the **high quality** of all the components of the SY155W mobile excavator. And in **SANY's five-year warranty**.

COMFORTABLE WORKSTATION

Ergonomics and functionality determine every detail of the SY155W's driver's cab. The perfect workstation to re-define productivity.

COMPREHENSIVE PROTECTION

With the SY155W, you are investing in safety in every possible way. Besides the **ROPS/FOPS certification,** the comprehensive **safety package also includes support cylinders on the axes** and a **camera.**

AGILE POWER

Compact dimensions , on the one hand, exemplary **mobility** and **flexibility** on the other. The **compact dimensions** and the **adjustable boom** make it possible.

HIGH-QUALITY TRIED AND TESTED

The **true power** of a machine can only be seen in the sum of its components. This is why the SY155W features **tried and tested components** from leading manufacturers.

ECONOMICALLY EFFICIENT

The SY155W pays for itself right from the first use, thanks to its **excellent price-performance ratio,** and beyond, due to its extremely **low energy consumption levels**. The intelligent hydraulic system, for example, ensures the highest possible **fuel efficiency**.

TECHNICAL HIGHLIGHTS

Engine	DEUTZ TCD4.1 L4
Rated power	115 kW / 2 000 rpm
Max. torque	609 Nm / 1 600 rpm
Max. travel speed	20 km/h
Swingspeed	10.5 rpm
Mainpump	Variable-piston-pump with loadsensing control
Max. oilflow	250 l/min

Not all products are available in all markets. As part of our continuous improvement process, we reserve the right to modify specifications and designs without giving prior notice. The figures may contain additional options.

SANY

Quality Changes the World

SANY HEAVY MACHINERY (UK) LTD
info@sanyuk.com
www.sanyuk.com

HEX - SY155W - 1202 - 01 - EN - V1