SANY

Quality Changes the World

PRODUCTIVITY DELIVERED TODAY

QUICK. PRECISE. POWERFUL.

CONSTRUCTION MACHINERY



COMPACT EXCAVATORS

SY155U

Engine
ISUZU ´4JJ1X
rated Power
78.5 kW / 1900 rpm
Bucket capacity
0.6 m³
Operating weight
16170 kg

SANY

For challenging tasks, you need a first-class partner

Quality comes from experience. And from new ideas. This is why we combine these two crucial factors at SANY. This is because we are one of the world's leading producers, having sold more than **320 000** excavators in **10 years**. This means that you can always rely on sophisticated products that have been tried and tested in practice. An impressive **5–7 %** of our annual turnover is dedicated to research and development.

320 000
EXCAVATORS SOLD IN
10 YEARS

5–7 %
TURNOVER FOR RESEARCH AND DEVELOPMENT

Quality Changes the World





SY155U
HARD FACTS

Max. bucket digging force
103 kN (ISO)

Max. arm digging force
67 kN (ISO)

Swingspeed
12.5 rpm

Max. travel speed
5.3 km/h





PROFITABILITY FOR THE NEXT GENERATION

How can we pack maximum working power into the smallest possible space? It‘s quite simple: With our sophisticated SANY compact excavator concept, and the SY155U short-tail-swing excavator is the jewel in the crown. Its compact dimensions and resulting short slewing radius allow it to work even in extremely tight spaces with no reduction in performance. It doesn‘t shy away from difficult tasks. It performs them with the help of its powerful drive and fully developed hydraulic system. The substantial machine weight and wide, stable undercarriage ensure secure stability. It boasts the best features for a variety of tasks and achieves exemplary productivity.

TOP PROPERTIES

ECONOMY

LESS IS MORE

Outstanding performance with low energy consumption – the efficient high-performance unit makes it possible. The smart auto-throttle function combines the best fuel efficiency with high power output. For the machine, this means not only lower fuel consumption, fewer exhaust emissions and reduced wear, but also enhanced driver comfort thanks to reduced engine noise and load relief due to automatic idling mode.

QUALITY

Stable foundation – For those who value durability and stability, the HD chassis is essential. You are covered with the SY155U, because the HD undercarriage comes as standard.

DIMENSIONS

Performs in the tightest spaces – The powerful short-tail-swing machine with short overhang radius enables working even in tight spaces, where conventional machines would not be suitable.

USER EXPERIENCE

Ergonomic design and enhanced user experience – The wide opening engine bonnet and clear, central arrangement of the key components make routine tasks such as maintenance and servicing simple and quick.



SAFETY

Protection for both people and the machine – From its stable, non-slip hand rails to its large mirrors and its camera, the safety package ensures that your construction site runs safely every day.

COMPONENTS

Thoroughly reliable – The quality and consequently the stability of the boom is a particular priority for SANY. The topside and underside of the SY155U are also manufactured from one continuous metal sheet.

ECONOMY

Efficiency and power – The smart control system adapts the pump capacity to the available engine power for greater performance and reduced fuel consumption. This boosts profitability on every construction site.

ECONOMY

Performance plus flexibility: The efficiency formula for intelligent minds

Those who now wish to work cost-efficiently on construction sites should avoid achieving performance at the expense of high energy consumption. Therefore, SANY has developed its compact excavator with efficiency as the highest priority. With the SY155U, you will benefit from an exemplary price-performance ratio, an efficient use of fuel and minimal maintenance costs with long maintenance intervals.



COMPONENTS

Reliable drive

The tried-and-tested ISUZU- engine guarantees reliable performance in the long term, even in harsh working conditions.



QUALITY

PRECISION GUARANTEES ROBUSTNESS

Durability and robustness are standard features on all SANY excavators. The welded seams, for instance, are done by robots with a high degree of precision. This guarantees maximum load-bearing capacity and a long service life. Yet another advantage: All access panels parts are made exclusively from metal – perfect for the harsh everyday conditions on the construction site.

USER EXPERIENCE

THE DRIVER'S CAB – WELCOME TO THE COMFORT ZONE

Safe, easy entry, plenty of room and full visibility outside – the driver's cab leaves nothing to be desired. The driver can also enjoy a comfortable, fully adjustable air-suspension seat, ergonomic controls and a modern audio system.

The automatic climate control and powerful ventilation and heating ensure that the temperature and fresh air levels in the cab are always perfect.



USER EXPERIENCE

Trust your instincts

The intuitive operation of all excavator functions via the joystick control makes optimum performance achievable with precision. The ergonomic shape of the joystick ensures that it sits comfortably in your hand and allows precise handling. The two auxiliary control circuits already come as part of the standard equipment and allow operation of various attachment devices such as tilt buckets or grapples. Both of these proportional control functions are operated smoothly via the sliders in the joysticks.



USER EXPERIENCE

Intelligent solutions for quick maintenance

The SY155U's maintenance-friendly concept is based on simplicity. The engine bonnet is easy to open, which makes all components needed for regular checks and maintenance easily accessible. The filter, radiator and battery are arranged centrally and can therefore be accessed easily and quickly. Particularly long oil change intervals also help keep downtimes to a minimum.



SANY PLUS ADVANTAGES

Our highlights – the added benefits SANY offers you:

- Reinforced chassis
- Comfortable air-suspension seat
- Compact short-tail-swing machine
- Clear instruments
- Large, high-resolution display
- High safety standards, e.g. camera
- ROPS/FOPS-certified for safety in operation



USER EXPERIENCE

Always optimally configured

A monitor with a high-resolution display shows all important data at a glance. The menu navigation is extremely user-friendly and enables the driver to manage machine functions safely and comfortably. The camera image can also be shown on the display if required.

The next inspection due and basic data such as torque and oil and cooling water temperatures are also displayed. Various attachment devices can also be easily changed at the touch of a button within the programme.

By pressing a button you can easily choose the operating mode that best suits the task at hand. The smart SANY drive control takes care of the rest. It always adjusts the engine and hydraulic power precisely to your requirements.

TECHNICAL SPECIFICATIONS

ENGINE

Model	ISUZU 4JJ1X
Type	Water-cooled, 4 cylinder, with commonrail and Adblue
Exhaust emissions	Stage V
Rated power	78.5 kW / 1 900 rpm
Max. torque	375 Nm / 1 800 rpm
Displacement	2 999 ccm
Batteries	2 x 12V / 120 Ah

SERVICE REFILL CAPACITIES

Fuel tank	210 l
Engine coolant	23.6 l
Engine oil	15 l
Drive (per side)	2.2 l
Adblue	20 l
Hydraulic oil tank	110 l

PERFORMANCE

Swingspeed	12.5 rpm
Max. travel speed	High 5.3 km/h, slow 3.1 km/h
Max. travel force	114 kN
Gradeability	35°
Bucket capacity	0.6 m³
Groundpressure	0.41 kg/cm²
Bucket digging force ISO	103 kN
Arm digging force ISO	67 kN

OPERATING WEIGHT

SY155U*	16 170 kg
SY155U weight w/o blade*	15 520 kg

* Includes 75 kg (165 lb) operator and full fuel tank and excludes bucket.

RELIEF VALVE SETTINGS

Implement circuit	343 bar
Swing circuit	250 bar
Travle circuit	343 bar
Pilot pressure	39 bar

HYDRAULIC SYSTEM

Mainpump	2 x variable-piston-pump with electronic positive control
Max. oilflow	2 x 110 l/min
Max. oilflow (AUX 1)	110 l/min
Max. oilflow (AUX 2)	40 l/min
Travelmotor	Variable displacement axial piston motor
Swingmotor	Axial piston motor

UNDER AND UPPER STRUCTURE

Boom length	4 600 mm
Arm length	3 000 mm
Bottomrollers	7
Toprollers	1
Rotation device	Planetary gear reducer driven by an axial piston motor, automatic hydraulic released slewing brake

LIFTING CAPACITIES OF LOWER AND UPPER DOZER BLADE

Load point heigh	Radius												Digging reach		
	2,0 m		3,0 m		4,0 m		5,0 m		6,0 m		7,0 m		Max.		Meter
below															
7,0 m kg					3353	3353							2536	2536	4,3
6,0 m kg					3632	3632	3310	2687					2216	2216	5,4
5,0 m kg					3594	3594	3944	2685	2590	2061			1994	1994	6,1
4,0 m kg			4736	4736	4643	3487	4146	2628	3822	2048			1764	1764	6,3
3,0 m kg			6858	4607	5314	3325	4484	2537	3967	2001			1625	1625	6,9
2,0 m kg			8370	4238	6031	3140	4855	2432	4144	1941	2549	1574	1548	1548	7,1
1,0 m kg			6651	3979	6547	2980	5144	2334	4278	1881	2748	1545	2183	1520	7,1
Ground line kg			6813	3868	6703	2876	5253	2260	4293	1834			2366	1539	6,9
-1,0 m kg	4686	4686	8485	3839	6484	2826	5115	2218	4163	1854			2659	1612	6,6
-2,0 m kg	7212	5997	7511	3854	5892	2819	4659	2209	3559	1813			3151	1763	6,2
-3,0 m kg	7480	6088	6070	3909	4842	2853	3697	2242					3048	2050	5,5
-4,0 m kg			3876	3876	2956	2948							2372	2372	4,4
above	2,0 m		3,0 m		4,0 m		5,0 m		6,0 m		7,0 m		Max.		Meter
7,0 m kg					3353	3353							2536	2536	4,3
6,0 m kg					4053	3632	3310	2687					2216	2216	5,4
5,0 m kg					4203	3594	3592	2685	2590	2061			2073	1994	6,1
4,0 m kg			4736	4736	4621	3487	3535	2628	2803	2048			2016	1764	6,3
3,0 m kg			6118	4607	4459	3325	3444	2537	2756	2001			2019	1625	6,9
2,0 m kg			5749	4238	4273	3140	3339	2432	2696	1941	2221	1574	2073	1548	7,1
1,0 m kg			5490	3979	4114	2980	3241	2334	2637	1881	2192	1545	2160	1520	7,1
Ground line kg			5379	3868	4009	2876	3167	2260	2590	1834			2192	1539	6,9
-1,0 m kg	4686	4686	5350	3839	3959	2826	3125	2218	2609	1854			2295	1612	6,6
-2,0 m kg	7212	5997	5366	3854	3953	2819	3116	2209	2569	1813			2498	1763	6,2
-3,0 m kg	7480	6088	5421	3909	3987	2853	3149	2242					2881	2050	5,5
-4,0 m kg			3876	3876	2956	2948							2372	2372	4,4

DIMENSIONS (TRANSPORT)

A	Transport length	8015 mm
B	Transport width*	2590 mm
	Transport width**	2690 mm
C	Upperstructure carriage	2490 mm
D	Height over cabin/ROPS	2820 mm
E	Height of Boom – transport	3292 mm
F	Overall length of crawler	3665 mm
G	Tail length	1500 mm
H	Track gauge	1990 mm
I	Undercarriage width (blade)*	2590 mm
	Undercarriage width (blade)**	2690 mm
J	Horizontal distance to blade	2650 mm
K	Blade height	480 mm
L	Track height	815 mm
M	Track pads width*	600 mm
	Track pads width**	700 mm
N	Min. ground clearance	425 mm
O	Counterweigth clearance	910 mm
P	Engine cover height	2692 mm
Q	Tail swing radius	1500 mm
R	Center distance of tumblers	2930 mm

* at 600 mm track pads width
** at 700 mm track pads width

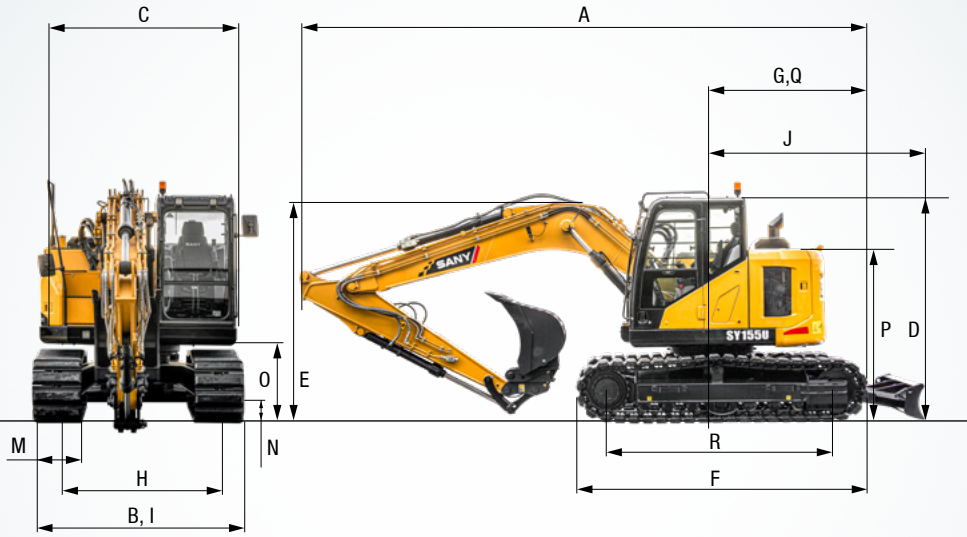

WORKING AREA

A	Max. digging reach	8780 mm
B	Max. digging depth	6020 mm
C	Max. digging height	9760 mm
D	Max. dumping height	7200 mm
E	Min. dumping height	2730 mm
F	Max. vertical digging depth	4530 mm
G	Overall height over arm by min. swing radius	6749 mm
H	Arm head distance with work equipment retracted as far as possible	2650 mm
I	Min. swing radius	2555 mm
J	Max. clearance when blade up	504 mm
K	Max. depth of blade down	350 mm

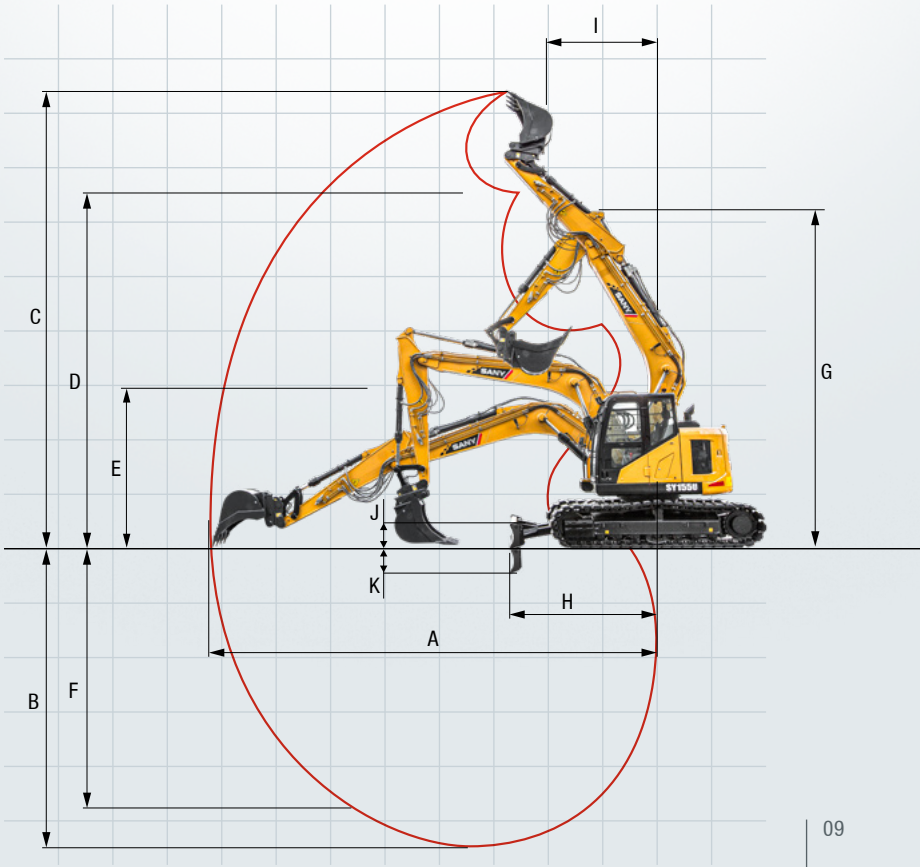



Ready for any challenge

Its extensive standard equipment makes the SY155U a perfect partner to tackle everyday challenges on the construction site. Optional extra equipment and attachment devices are also available to increase its flexibility even more.

OPERATORS COMFORT / CAB

Airsuspension seat	●
Heated seat	●
Heater	●
Automatic air conditioning C/H	●
Radio and speaker	●
Armrests (adjustable)	●
12v outlets	●
Wiper	●
Sprayer f. wiper	●
Sky light openable	●
Rubberfloor	●
AUX 1 on Joystick	●
AUX 2 on Joystick	●
Removable front-window	●

WORKING LIGHTS

Lights – front (LED)	●
Lights – boom (LED)	●
Lights – platform (LED)	●

ENGINE

Auto idle	●
DPF	●
Diesel filter	●
Airfilter	●

WORKING EQUIPMENT

Boom and arm load holding valves with overload indicator	●
Double acting circuit for hydraulic quick coupler with piping	●
Hammer & Shear line proportional on Joystick with piping	●
Rotation line proportional on Joystick with piping	●
Flow adjustment for attachments	●
Dozer blade	●
Without dozer blade	○

SAFETY

Battery master switch	●
Warning beacon	●
Lockable hoods	●
Handrails	●
Lockable fuel cap	●
Rear Camera	●

UNDERCARRIAGE

Steel tracks	●
Holes/loops for fixing	●

HYDRAULIC SYSTEM

Swing brake	●
2 speed travel	●
Hydr. Pre-pressure operating joysticks	●
Piping for additional hydraulic function AUX 1	●
Piping for additional hydraulic function AUX 2	●
Mainfilter	●

Standard equipment ● Special option ○

The standard and special options differ depending on the country in which the compact excavator is delivered. If you have any questions, please contact your dealer directly.

Parts supply – quick and reliable

With the purchase of a SANY compact excavator you have made an investment in the future. Fast availability of spare parts is your guarantee of minimal downtimes and failure times.



A SERVICE YOU CAN RELY ON

Just as we do with our excavators, we also demand high quality and reliability of our service products. This underlines our equipment's performance in terms of their durability and their excellent price-performance ratio. After all, maintenance is crucial for efficiency, cost-effectiveness and safety. Your SANY dealer is happy to help you with a comprehensive range of services to ensure that your machine continues operating efficiently in the long term.

SANY – flexible, fast and always there for you

Rapid assistance, tailored advice and a reliable supply of original parts – that is what we mean by a premium service.



* To locate your nearest dealer, visit https://www.sanyuk.com.

SANY PLUS ADVANTAGES

The added benefits SANY offers you:

- ✚ Experienced dealer network throughout England, Wales, Northern Ireland and Ireland
- ✚ Direct sales and support route in Scotland
- ✚ Dedicated SANY team based in the UK to support you and your product
- ✚ UK office and parts warehouse to ensure SANY excavators are fully supported

Detailed information in black and white

Handbooks and documents are available for all SANY compact excavators, and these can help you with operation, maintenance, servicing and repairs. These include operating and maintenance instructions and technical specifications.



HIGHLIGHTS **SY155U**

COMPACT PRODUCTIVITY

The SY155U short-tail-swing excavator shows what it's capable of, even in confined areas. The compact design with short slewing radius allows for powerful operation even in tight spaces. And thanks to its manoeuvrability, you can easily access areas not possible with other machines of its type.



STABLE FOUNDATION

HD undercarriage as standard: You can rely on the enhanced control of the idler to guarantee a **long service life**, even with the toughest applications. The powerful ISUZU-AR-4JJ1XASC engine with **AdBlue emission control is part of this**.

PERFORMS IN THE TIGHTEST OF SPACES

Experience **compact mobility** with this short-tail-swing machine. Perfect for working in places where space is limited, for example in inner-city areas.

ERGONOMIC DESIGN AND ENHANCED USER EXPERIENCE

From the **air-suspension seat** to the large **storage compartments** – the driver's cab was built for comfort.

PROTECTION FOR PEOPLE AND MACHINES

Safety valves are essential for safety on the construction site, not only when lifting loads but also when moving earth masses – so naturally, they are provided as **standard** with the SY155U.

THOROUGHLY RELIABLE

Continuous sheet metal on the topside and underside of the boom and **particularly precise, robot-controlled welded seams** underpin our quality standards for the toughest requirements.

EFFICIENCY AND POWER

Low energy consumption levels are a characteristic feature of the SY155U. The **smart hydraulic system** ensures the highest possible fuel efficiency, fewer exhaust emissions and **reduced wear**.

TECHNICAL HIGHLIGHTS

Engine	ISUZU 4JJ1X
Rated power	78.5 kW / 1 900 rpm
Max. torque	375 Nm / 1 800 rpm
Max. travel speed	5.3 km/h
Swingspeed	12.5 rpm
Mainpump	2 x variable-piston-pump with electronic positive control
Max. oilflow	2 x 110 l/min

Not all products are available in all markets. As part of our continuous improvement process, we reserve the right to modify specifications and designs without giving prior notice. The figures may contain additional options.

SANY

Quality Changes the World

SANY HEAVY MACHINERY (UK) LTD
info@sanyuk.com
www.sanyuk.com

HEX - SY155U - 1202 - 01 - EN - V1