SANY

SY35C/SY35U

MINI EXCAVATOR

Max. Gross Power	Operating Weight	Max. Dig Depth
17.3 kW / 2,200 rpm	3,680 kg	3,115 mm



SANY:

FORGING THE FUTURE TOGETHER

Founded in 1989, SANY has grown into one of the world's largest construction equipment manufacturers, with global R&D and production – including European facilities – and machines working in 150+ countries. Our range spans excavators, road and port machinery, and cranes, built with proven manufacturing heritage and modern quality systems.

A GLOBAL LEADER BEHIND EVERY RANGE

From compact excavators to high-tonnage earthmovers, cranes, telehandlers, concrete machinery, road equipment and more, SANY's worldwide product range reflects decades of innovation, investment, and real-world experience.

This broad international range is proven on job sites in over 150 countries, ensuring every machine delivered to Europe is backed by extensive testing, real-world performance and the strength of a global supply chain.

ENGINEERED FOR OUR EUROPEAN CUSTOMERS

Every SANY machine destined for Europe is engineered to meet European regulations and real-world use cases – from CE and Stage V compliance to region-specific specifications and options.

For European construction customers, this worldwide capability translates directly into trust. SANY selects and engineers its product line specifically for local requirements, combining global innovation with European-quality standards, dealer support and service.

GLOBAL MANUFACTURING EXCELLENCE

SANY's long-standing commitment to quality and innovation – supported by advanced intelligent manufacturing and a sustained 5-7% of annual revenue reinvested into R&D – results in machines that deliver reliability, efficiency, and consistent performance on site.

With state-of-the-art production facilities and rigorous global testing standards, every machine is built to withstand demanding conditions and deliver long-term value.

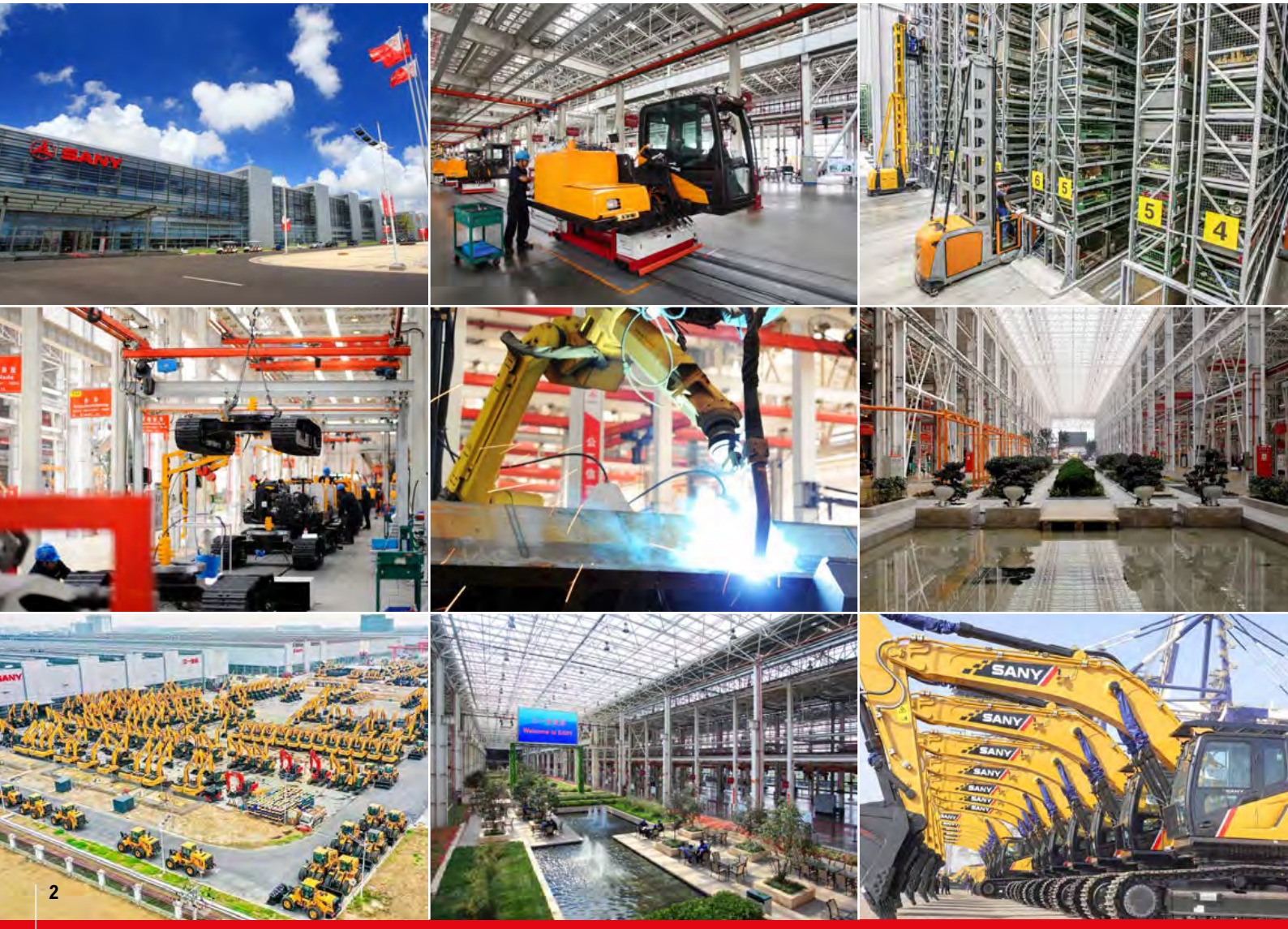

INTRODUCING THE

SY35C/SY35U

Designed for contractors who need maximum performance in restricted spaces, the SANY 3 and a half tonne excavators deliver the digging power, control, and reliability required to work efficiently across a wide range of applications.

From landscaping and utilities to general construction, these machines combine strong hydraulic performance with a compact, easily transportable footprint — allowing operators to work confidently on tight sites without sacrificing productivity.



WHY CHOOSE SANY MINI EXCAVATORS

WORLD RENOWNED COMPONENTS

SANY uses proven, top-tier components to deliver long-lasting reliability – meaning you benefit from fewer breakdowns, longer service life, and lower ownership costs.

GREAT VALUE, UNCOMPROMISED QUALITY

You can have confidence in your return on investment. SANY mini excavators are loaded with the latest innovations to help reduce costs, increase productivity and protect resale value.

INDUSTRY LEADING 5 YEAR WARRANTY

Built to last – and backed by an industry-leading warranty – giving you lower risk, predictable costs, and confidence on every job.

LOW OPERATING COSTS

Simple engineering, readily available parts, and low fuel consumption reduce ongoing running costs – a major advantage in Europe's high-cost markets.

LOCAL SUPPORT

Europe-wide expert dealers and value-added aftermarket support keep your machine running, minimise downtime, and simplify ownership.

STANDARD ADVANCED FEATURES

SANY excavators include all essential features as standard – no costly add-ons or custom tweaks required.

SY35C / SY35U

PRODUCTIVITY

Designed for tight sites and fast-moving jobs, the SY35U's zero tailswing and offset boom enable precise work alongside walls, while the SY35C offers compact versatility. Both machines combine easy transport, low ground disturbance and dependable performance.



COMPACT DIMENSIONS

With compact dimensions and zero tailswing on the SY35U, you can access tight sites, work flush to walls or obstacles, and minimise repositioning for faster setup - all with low ground impact.

SANY's swing boom design lets you offset the boom to the left or right, so you can dig alongside walls and in tight spaces without rotating/repositioning the machine, reducing ground disturbance.

Integrated tie-down points on the track frame and dozer blade simplify secure trailering, cutting loading time, improving load restraint compliance, and reducing risk of damage during transport.

HYDRAULICS DESIGNED FOR PRODUCTIVITY

SANY's twin auxiliary hydraulics as standard allow you to operate a wider range of attachments with powered movement in both directions, giving you reversible control and faster task changes.

SANY's hydraulic quick hitch enables in-cab attachment changes within seconds, eliminating manual pin removal, reducing exposure to pinch points, and minimising downtime between tasks.

VERSATILE OPERATION

The SY35C and SY35U come factory-equipped to make them plug-and-play with most common attachments such as breakers, grapples, tilt buckets, augers.



SY35C / SY35U

EFFICIENCY

Built to keep you working longer for less, the SY35C and SY35U combine strong performance with outstanding fuel efficiency. An ultra-efficient YANMAR Stage V engine and large 50-litre fuel tank reduce refuelling stops, helping maximise uptime on every shift.

CONSUMING LESS, STORING MORE

Equipped with an fuel-saving YANMAR Stage V engine, the SY35C and SY35U deliver 17.3 kW of high-performance power at 2,200 rpm.

A 50-litre fuel tank and efficient consumption allow for extended refuelling intervals, cutting downtime and fuel runs so the machine stays productive longer between stops.

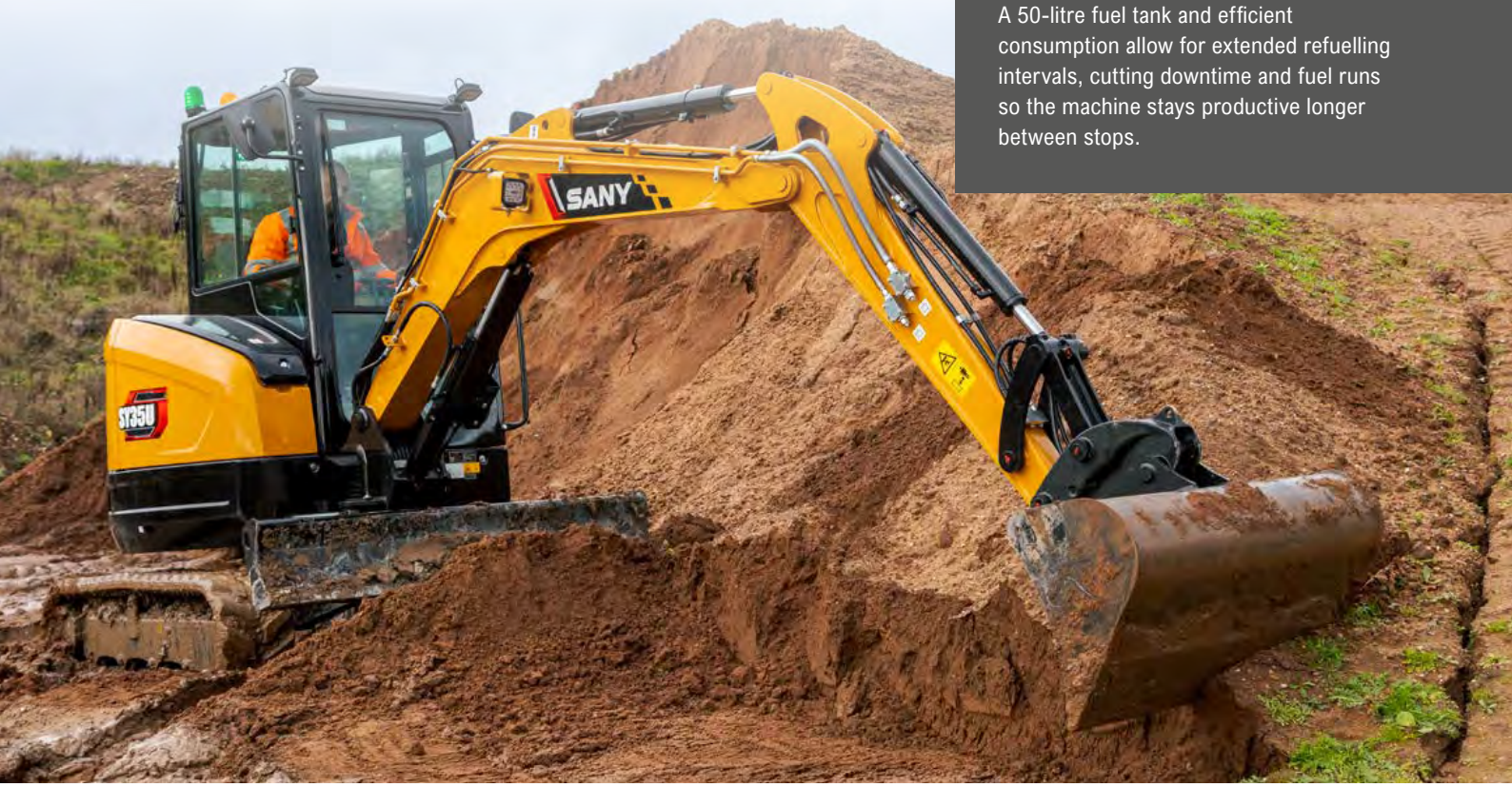

EFFICIENT OPERATION

SANY's two-speed tracking lets the operator choose high or low travel to match terrain and task reducing unnecessary revs and therefore fuel usage.



ENERGY-EFFICIENT HYDRAULICS

SANY's load-sensing hydraulics deliver only the flow and pressure the working circuits need, so the system wastes less energy and burns less fuel.

A well-matched engine and hydraulic system that measures pump output to demand, reduces wasted flow and fuel resulting in lower running costs for the customer.



SY35C / SY35U

OPERATOR ENVIRONMENT

Designed to support operators through long working days, the SY35 delivers a comfortable, quiet, and intuitive working environment. Thoughtful cab design, excellent visibility, and low vibration help reduce fatigue while improving confidence and safety on site. The SY35 excavators offer both cab and canopy configurations to suit different working environments.



PREMIUM COMFORT

The ergonomic operator's cab of the SY35 excavators features a high-back seat and adjustable armrests, designed to keep operators comfortable, focused, and productive.

A standard-fit heater and manual air conditioning system keeps the cab comfortable, ensuring operators remain productive in all weather conditions.

The quiet, low-vibration engine reduces noise and vibration levels to a minimum, creating a more comfortable operating environment and allowing the machine to work effectively in noise-sensitive areas.



Joysticks with dual proportional control circuits enable safe and precise operation, while the floating blade function allows for faster, smoother levelling with less operator effort – improving finish quality and reducing fatigue.

EVERYDAY EASE

Clear instrumentation and a high-resolution colour display make machine operation easier and more intuitive, helping operators work with confidence and precision.

For added comfort and practicality, the SY35 mini excavators come equipped with a bluetooth radio, USB socket, cup holder, and a storage compartment, keeping essential items within easy reach.

JOB SITE AWARENESS

All-round mirrors provide clear visibility of the surrounding work-space, improving operator awareness and safety on site.

SY35C / SY35U

SAFETY & SECURITY

Designed to support the operator, fleet owner and fellow workers at every stage of the job, the SY35 mini excavators combine a strong, reinforced structure with smart security and safety systems. Excellent visibility and clearly positioned safety features improve awareness on busy sites, helping operators stay in control.

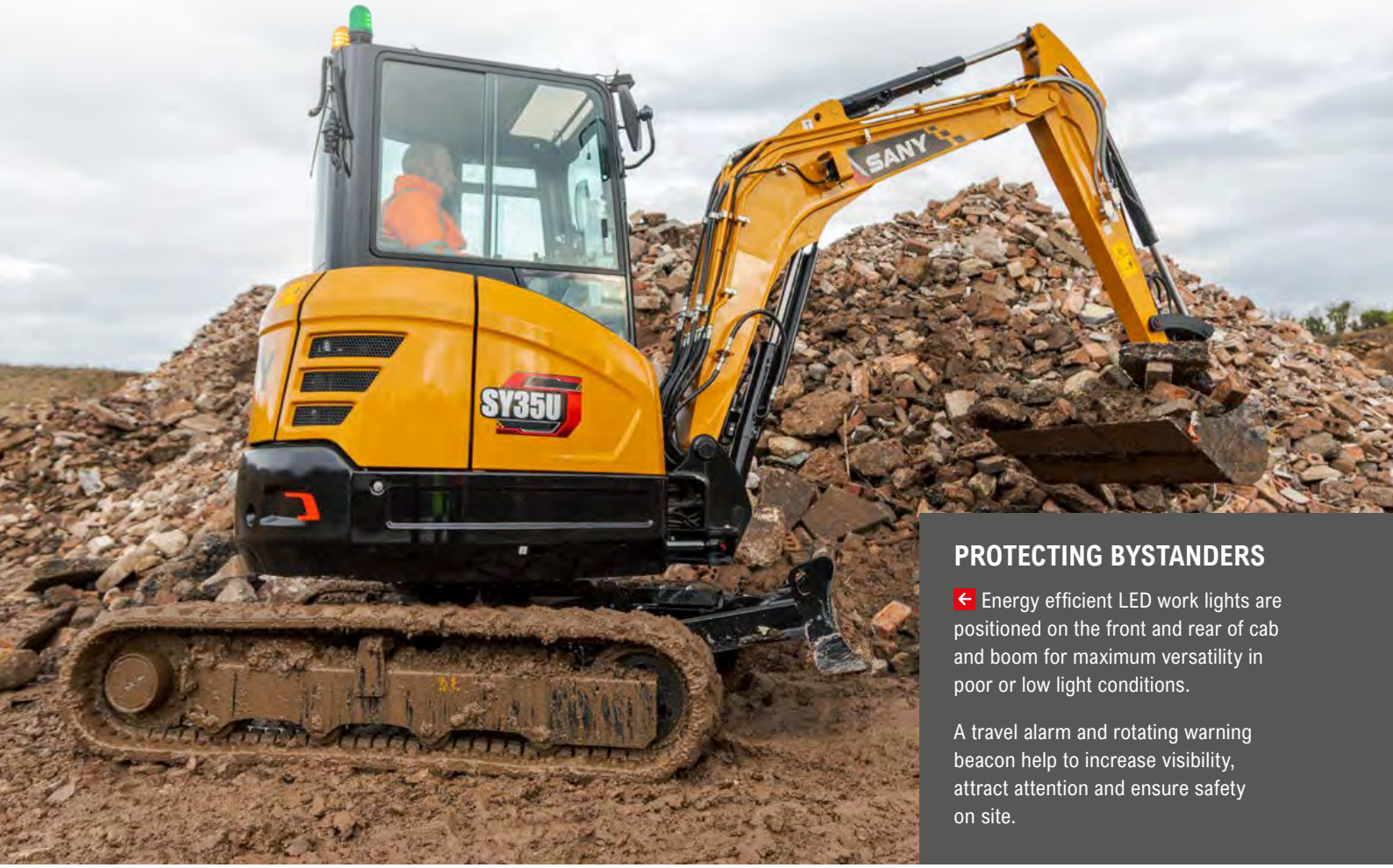

PROTECTING BYSTANDERS

Energy efficient LED work lights are positioned on the front and rear of cab and boom for maximum versatility in poor or low light conditions.

A travel alarm and rotating warning beacon help to increase visibility, attract attention and ensure safety on site.

STRUCTURAL INTEGRITY

ROPS and FOPS certification ensures the SY35 excavators meet stringent rollover and tip over protection standards.

Heavy-duty steel bodywork provides robust protection against on-site damage, safeguarding vital structures and contributing to reduced lifetime ownership costs.

EMERGENCY SHUTDOWN

Featuring both a battery disconnect switch and an emergency stop button, the system allows immediate power isolation to enhance operator and site safety.

EVI e.vision

ADVANCED SECURITY

Lockable service doors protect critical components and fuel systems, preventing unauthorised access and enhancing site security.

Backed by the CESAR Datatag Scheme for proven theft deterrence and equipped with CESAR ECV, these machines allow swift and dependable verification of emissions category.

Advanced anti-theft EVI telematics employ GPS tracking and configurable geofencing to safeguard the machine from theft and unauthorised use.

SY35C / SY35U

SERVICE & MAINTENANCE

Designed for optimal uptime, SANY excavators feature wide service doors, clearly accessible service points, and extended service intervals to simplify maintenance and maximise machine availability. Premium, high-quality components consistent throughout the range further enhance durability and reliability, ensuring reliable performance shift after shift.



MAINTENANCE MADE EASY

SANY mini excavators are engineered for streamlined service and maintenance, with design features that make routine upkeep faster and more efficient.

A wide-opening engine door provides ground-level access to all key service points, ensuring that daily checks are quick, simple, and easy to perform.

ROBUST STRUCTURES

Integrated guarding for the dozer blade and hydraulic cylinders provides robust protection against on-site impacts, minimising the risk of component damage, unplanned downtime, and expensive repair work.

An X-beam configuration with a high-strength box-section structure provides exceptional durability and superior resistance to torsional forces.

COMMON, PREMIUM COMPONENTS

Produced in advanced manufacturing facilities in China, SANY excavators are built for high quality and lasting durability, utilising high-spec components from reputable global manufacturers.

Shared componentry across the range, combined with an extensive European dealer network, ensures rapid response and efficient turnaround for any machine repair.





INCREASED WORKING HOURS

With 500-hour service intervals, maintenance frequency is reduced, lowering operating costs and improving machine availability.

Real-time health alerts, remote diagnostics, and scheduled maintenance via SANY EVI telematics work together to enhance reliability and extend machine life.

SY35C / SY35U

ATTACHMENTS

SANY machines offer extended capability through a broad selection of easily interchangeable attachments. This range enables efficient performance across varied tasks such as digging, drilling, land clearing, material handling, and demolition.



BUCKETS

SANY provides a complete range of excavator buckets designed to enhance your machine's efficiency. From general-purpose digging buckets to more specialised options, they enable you to tackle a wide variety of job sites.

QUICK HITCH

SANY quick hitches enable rapid attachment changes, helping you get more done in less time. By reducing manual labour and ensuring a secure fit, they expand the machine's versatility and keep your operations running smoothly.

BREAKERS

SANY breakers have been designed to deliver powerful breaking performance, long-lasting durability, and high efficiency. They are suitable for a wide range of applications such as quarry, tunneling, civil construction, trenching, road & landscaping.

GRABS

SANY excavator grabs deliver powerful, reliable material handling with high clamping force, smooth hydraulic control and durable steel construction. The result is a cost-effective, high-performance attachment that boosts productivity and control on every job.*

*SANY attachment options may vary depending on country.

SY35C / SY35U

YOUR UPTIME. OUR PRIORITY.

Rely on SANY's value-added aftermarket services to keep your equipment operating at peak efficiency. From proactive maintenance to reducing unexpected downtime and controlling operating costs, we provide the support your business depends on. Our European service solutions further boost performance, streamline maintenance tasks, and improve profitability across your fleet.

5 YEAR WARRANTY

Built on a global reputation for reliability and durability, SANY excavators come with an unmatched 5-year warranty* – one of the strongest in the industry.

It's a clear statement of the confidence we have in our machines and our commitment to your uptime. Your investment is protected from day one, giving you the assurance that if an issue arises, you're fully covered.

*Terms and conditions apply.

SERVICE AND SUPPORT

SANY's extensive network of certified technicians and dealer partners provides on-site service and technical expertise designed to minimise downtime and maintain peak machine performance.

Working in coordination with our advanced manufacturing facilities in China, our European teams combine global engineering capability with practical local support.

SANY GENUINE PARTS

SANY genuine parts are engineered, rigorously tested, and manufactured to the exact specifications required by your machine. Their precise fit and compatibility guarantee maximum performance and system integrity.

By maintaining correct operational tolerances, they enhance on-site safety and significantly reduce the risk of unplanned failures or downtime. All genuine parts are supported by a 12-month warranty for added assurance.





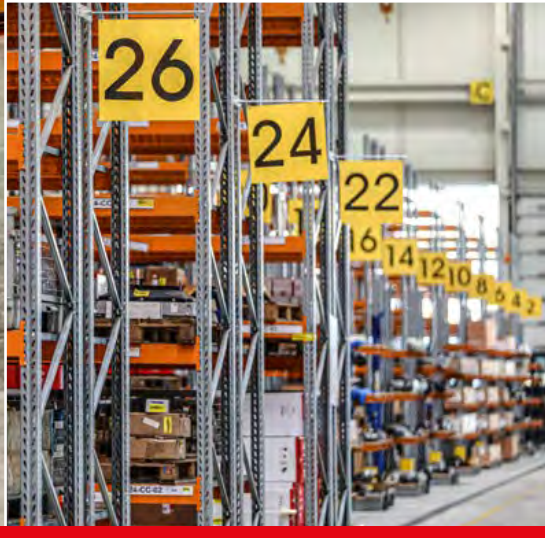

SY35C / SY35U

INTELLIGENT SUPPORT

SANY's connected tools give you clarity, confidence, and control on every project. ROOTPILOT brings precision to the bucket; EVI Telematics brings visibility to the fleet. Together, they reduce downtime, cut costs, and boost productivity. Smart technology – driving your success.



EVI e.vision

Designed exclusively for Europe, our digital fleet management system EVI gives you complete visibility of your machines whenever and wherever you need it. By simplifying fleet oversight, it enables better decision-making, lowers costs, and improves uptime across your operations. With built-in safety and security features that let you monitor location and usage in real time, you gain greater control and peace of mind.

Key benefits include:

- Enhanced fleet visibility and remote machine management
- Set authorised operating hours and create geofenced security zones to reduce theft risk and misuse
- Greater visibility of routine checks and machine health
- Multi-channel, real-time communication for faster decision-making
- Operating report analysis for smarter, data-led decision-making
- Customer account management for personalised, data-backed communication

SANY ROOTPILOT

SANY ROOTPILOT is a high-precision 3D machine-control system that uses GNSS, IMU sensors, and smart algorithms to guide excavators in real time. It gives operators clear, intuitive 3D feedback for faster, safer, and more accurate digging.

ROOTPILOT installs quickly, works with multiple machines and attachments, and syncs designs through the cloud so every operator works from the same plan. It's ideal for highways, municipal works, and foundation projects where precision is critical.

Available in Fundamental and Premium versions, ROOTPILOT supports everything from basic grading to full 3D model guidance, offsets, layer control, and complex digital designs.

Main customer benefits:

- ±3 cm accuracy for first-time-right excavation
- Avoidance of underground utilities and hazards
- Lower fuel, labour, and rework costs
- Faster production with fewer survey checks
- Works with 2D or full 3D design models
- Boosts operator confidence and consistency

SY35C / SY35U

SPECIFICATION

ENGINE

	SY35U	SY35C
Model	Yanmar 3TNV88F Stage V	Yanmar 3TNV88F Stage V
Type	In-line, Water-cooled, 4-Cycle, Mechanical Pump, Naturally Aspirated	In-line, Water-cooled, 4-Cycle, Mechanical Pump, Naturally Aspirated
Exhaust emissions	Stage V	Stage V
Rated power	17. 3 Kw @ 2,200 rpm	17.3 Kw @ 2,200 rpm
Max. torque	90 Nm @ 1,300 rpm	90 Nm @ 1,300 rpm
Displacement	1642 cc	1642 cc

HYDRAULIC SYSTEM

	SY35U	SY35C
Main pump	Variable displacement axial piston pump	Variable displacement axial piston pump
Max. oil flow	88 l/min	88 l/min
Travel motor	Variable displacement axial piston motor	Variable displacement axial piston motor
Swing motor	Axial piston motor	Axial piston motor
Max. oil flow (AUX 1)	70 l/min	70 l/min
Max. oil flow (AUX 2)	70 l/min	70 l/min

PERFORMANCE

	SY35U	SY35C
Swing speed	10 rpm	10 rpm
Max. travel speed	High 4.2 km/h	High 4.2 km/h
Max. travel force	36.2 kN	36.2 kN
Gradeability	58%/30°	58%/30°
Bucket capacity	0.12 m^3	0.12 m^3
Ground pressure	32 kPa	32 kPa
Bucket digging force (ISO)	30.4 kN	30.4 kN
Arm digging force (ISO)	18.2 kN	18.2 kN

SERVICE REFILL CAPACITIES

	SY35U	SY35C
Fuel tank	50 l	50 l
Engine coolant	7.7 l	7.7 l
Engine oil	6.7 l	6.7 l
Drive (per side)	0.7 l	0.7 l
Hydraulic system	40 l	40 l

Based on theoretical calculation at max flow with no load.

Subject to alterations.

In the interest of continual equipment development, SANY reserves the right to change these specifications at any time without prior notification.

OPERATING WEIGHT

	SY35U	SY35C
Cab	3,790 kg	3,790 kg

Note: Includes 75kg (165 lb) operator, full fuel tank and excludes any attachments or hitch.

UNDER & UPPER STRUCTURE

	SY35U	SY35C
Boom length	2,540 mm (2,400 mm Opt)	2,540 mm (2,400 mm Opt)
Arm length	1,400 mm (1,650 mm Opt)	1,400 mm (1,650 mm Opt)
Bottom rollers	4	4
Top rollers	1	1
Rotation device	Axial piston motor, planetary gear, singlerow slewing ring, hydraulic parking brake.	Axial piston motor, planetary gear, singlerow slewing ring, hydraulic parking brake.
Undercarriage	Reinforced undercarriage. Welded drive frame.	Reinforced undercarriage. Welded drive frame.

RELIEF VALVE SETTINGS

	SY35U	SY35C
Implement circuit	24.5 MPa	24.5 MPa
Swing circuit	20.6 MPa	20.6 MPa
Travel circuit	27.0 MPa	27.0 MPa
Pilot circuit	3.5 MPa	3.5 MPa

SOUND LEVEL

	SY35U	SY35C
Noise level inside cabin	TBC dB(A)	TBC dB(A)
Noise guaranteed value	TBC dB(A)	TBC dB(A)

SANY

SY35C / SY35U

SPECIFICATION

SY35U LIFTING CAPACITIES - DOZER BLADE DOWN
BOOM 2,540MM / ARM 1,400MM / UNDERCARRIAGE 1,720MM

Load Point Height (B)	Radius (A) 1.0 m		2.0 m		3.0 m		4.0 m		Digging Reach Max	
4.0 m kg									719*	656
3.0 m kg							671*	502	635*	455
2.0 m kg					870*	762	727*	489	612*	384
1.0 m kg					1205*	701	844*	466	640*	361
Ground line kg					1382*	667	923*	449	726*	372
–1.0 m kg			2311*	1248	1332*	664	865*	449	795*	429
–2.0 m kg			1621*	1292	945*	691			791*	623

SY35U LIFTING CAPACITIES - DOZER BLADE UP
BOOM 2,540MM / ARM 1,400MM / UNDERCARRIAGE 1,720MM

Load Point Height (B)	Radius (A) 1.0 m		2.0 m		3.0 m		4.0 m		Digging Reach Max	
4.0 m kg									710	656
3.0 m kg							541	455	491	455
2.0 m kg					828	762	528	384	415	384
1.0 m kg					765	701	504	361	390	361
Ground line kg					727	667	487	372	402	372
–1.0 m kg			1402	1248	727	664	487	429	465	429
–2.0 m kg			1448	1292	755	691			679	623

SY35U LIFTING CAPACITIES - DOZER BLADE DOWN
BOOM 2,540MM / ARM 1,650MM / UNDERCARRIAGE 1,720MM

Load Point Height (B)	Radius (A) 1.0 m		2.0 m		3.0 m		4.0 m		Digging Reach Max	
4.0 m kg									599*	557
3.0 m kg							588*	503	518*	407
2.0 m kg							659*	487	501*	348
1.0 m kg					1109*	702	791*	461	521*	328
Ground line kg			1136*	1136*	1136*	658	892*	440	584*	336
–1.0 m kg	1373*	1373*	2071*	1219	1345*	648	888*	434	731*	381
–2.0 m kg			1844*	1256	1083*	666			751*	518

SY35U LIFTING CAPACITIES - DOZER BLADE UP
BOOM 2,540MM / ARM 1,650MM / UNDERCARRIAGE 1,720MM

Load Point Height (B)	Radius (A) 1.0 m		2.0 m		3.0 m		4.0 m		Digging Reach Max	
4.0 m kg									599*	557
3.0 m kg							543	503	439	407
2.0 m kg							526	487	376	348
1.0 m kg					766	702	502	461	355	328
Ground line kg			1136*	1136*	721	658	478	440	364	336
–1.0 m kg	1373*	1373*	1371	1219	711	648	472	434	413	381
–2.0 m kg			1411	1256	729	666			563	518

SY35U LIFTING CAPACITIES - DOZER BLADE DOWN
BOOM 2,400MM / ARM 1,650MM / UNDERCARRIAGE 1,720MM

Load Point Height (B)	Radius (A) 1.0 m		2.0 m		3.0 m		4.0 m		Digging Reach Max	
4.0 m kg									*652	624
3.0 m kg							*662	509	*556	443
2.0 m kg					*809	784	*715	497	*536	376
1.0 m kg					*1148	722	*835	473	*560	353
Ground line kg			*1392	1241	*1374	678	*921	453	*635	362
–1.0 m kg	*1492	*1492	*2374	1245	*1352	666	*875	448	*764	414
–2.0 m kg			*1716	1282	*982	685			*751	583

SY35U LIFTING CAPACITIES - DOZER BLADE UP
BOOM 2,400MM / ARM 1,650MM / UNDERCARRIAGE 1,720MM

Load Point Height (B)	Radius (A) 1.0 m		2.0 m		3.0 m		4.0 m		Digging Reach Max	
4.0 m kg									*652	624
3.0 m kg							549	509	477	443
2.0 m kg					*809	784	536	497	406	376
1.0 m kg					787	722	511	473	382	353
Ground line kg			*1392	1241	741	678	491	453	392	362
–1.0 m kg	*1492	*1492	1398	1245	729	666	486	448	449	414
–2.0 m kg			1437	1282	748	685			634	583

1. This capability is calculated according to GB/T 13331, ISO10567 standards.The limiting coefficient of the hydraulic system is 0.87, and the tipping coefficient is 0.75.
2. Marked with * is limited by hydraulic pressure, marked without * is limited by stability.
3. The lifting point is the support hole in front of the bucket rod (excluding the weight of the bucket). If there are additional accessories such as buckets, they should be deducted from the above lifting weight.
4. A- Radius of loading point (m), B- Loading point height (m).

SPECIFICATION

SY35C LIFTING CAPACITIES - DOZER BLADE DOWN
BOOM 2,540MM / ARM 1,400MM / UNDERCARRIAGE 1,550MM

Load Point Height (B)	Radius (A) 1.0 m		2.0 m		3.0 m		4.0 m		Digging Reach Max	
4.0 m kg									*717	*717
3.0 m kg									*635	532
2.0 m kg					*817	801	*713	521	*612	450
1.0 m kg					*1076	750	*798	503	*640	423
Ground line kg			*1525	1279	*1231	718	*856	489	*727	437
–1.0 m kg	*1670	*1670	*1986	1290	*1195	713			*795	506
–2.0 m kg			*1420	1331	*797	744			*790	741

SY35C LIFTING CAPACITIES - DOZER BLADE UP
BOOM 2,540MM / ARM 1,400MM / UNDERCARRIAGE 1,550MM

Load Point Height (B)	Radius (A) 1.0 m		2.0 m		3.0 m		4.0 m		Digging Reach Max	
4.0 m kg									*717	*717
3.0 m kg									*635	532
2.0 m kg					*817	801	638	521	551	450
1.0 m kg					937	750	619	503	520	423
Ground line kg			*1525	1279	903	718	604	489	538	437
–1.0 m kg	*1670	*1670	1711	1290	898	713			625	506
–2.0 m kg			*1420	1331	*797	744			*790	741

SY35C LIFTING CAPACITIES - DOZER BLADE DOWN
BOOM 2,540MM / ARM 1,400MM / UNDERCARRIAGE 1,720MM

Load Point Height (B)	Radius (A) 1.0 m		2.0 m		3.0 m		4.0 m		Digging Reach Max	
4.0 m kg									717*	717*
3.0 m kg									635*	616
2.0 m kg					822*	822*	709*	606	612*	523
1.0 m kg					1081*	881	797*	587	640*	494
Ground line kg			1535*	1535*	1231*	848	856*	573	727*	512
–1.0 m kg	1678*	1678*	1978*	1564	1195*	844			796*	594
–2.0 m kg			1412*	1412*					789*	789*

SY35C LIFTING CAPACITIES - DOZER BLADE UP
BOOM 2,540MM / ARM 1,400MM / UNDERCARRIAGE 1,720MM

Load Point Height (B)	Radius (A) 1.0 m		2.0 m		3.0 m		4.0 m		Digging Reach Max	
4.0 m kg									717*	717*
3.0 m kg									635*	616
2.0 m kg					822*	822*	643	606	551	523
1.0 m kg					939	881	624	587	521	494
Ground line kg			1535*	1535*	905	848	609	573	540	512
–1.0 m kg	1678*	1678*	1715	1564	901	844			628	594
–2.0 m kg			1412*	1412*					789*	789*

SY35C LIFTING CAPACITIES - DOZER BLADE DOWN
BOOM 2,540MM / ARM 1,650MM / UNDERCARRIAGE 1,550MM

Load Point Height (B)	Radius (A) 1.0 m		2.0 m		3.0 m		4.0 m		Digging Reach Max	
4.0 m kg									*599	*599
3.0 m kg							*602	531	*518	476
2.0 m kg					*724	*724	*648	519	*500	408
1.0 m kg					*997	749	*750	497	*520	385
Ground line kg			*1570	1262	*1188	709	*829	479	*583	395
–1.0 m kg	*1427	*1427	*2060	1264	*1206	698	*807	476	*730	449
–2.0 m kg	*2469	*2469	*1610	1298	*962	716			*752	614

SY35C LIFTING CAPACITIES - DOZER BLADE UP
BOOM 2,540MM / ARM 1,650MM / UNDERCARRIAGE 1,550MM

Load Point Height (B)	Radius (A) 1.0 m		2.0 m		3.0 m		4.0 m		Digging Reach Max	
4.0 m kg									*599	*599
3.0 m kg							*602	531	*518	476
2.0 m kg					*724	*724	636	519	*500	408
1.0 m kg					937	749	614	497	475	385
Ground line kg			*1570	1262	895	709	595	479	489	395
–1.0 m kg	*1427	*1427	*1684	1264	883	698	592	476	557	449
–2.0 m kg	*2469	*2469	*1610	1298	902	716			*752	614

SY35C LIFTING CAPACITIES - DOZER BLADE DOWN
BOOM 2,540MM / ARM 1,650MM / UNDERCARRIAGE 1,720MM

Load Point Height (B)	Radius (A) 1.0 m		2.0 m		3.0 m		4.0 m		Digging Reach Max	
4.0 m kg									600*	600*
3.0 m kg							602*	602*	518*	518*
2.0 m kg					724*	724*	652*	604	500*	477
1.0 m kg					997*	881	750*	582	521*	452
Ground line kg			1576*	1536	1188*	840	828*	564	585*	465
–1.0 m kg	1435*	1435*	2060*	1538	1205*	829	803*	561	732*	529
–2.0 m kg	2480*	2480*	1603*	1574	957*	848			749*	726

SY35C LIFTING CAPACITIES - DOZER BLADE UP
BOOM 2,540MM / ARM 1,650MM / UNDERCARRIAGE 1,720MM

Load Point Height (B)	Radius (A) 1.0 m		2.0 m		3.0 m		4.0 m		Digging Reach Max	
4.0 m kg									600*	600*
3.0 m kg							602*	602*	518*	518*
2.0 m kg					724*	724*	638	604	500*	477
1.0 m kg					939	881	615	582	476	452
Ground line kg			1576*	1536	896	840	596	564	490	465
–1.0 m kg	1435*	1435*	1688	1538	885	829	593	561	559	529
–2.0 m kg	2480*	2480*	1603*	1574	904	848			749*	726

SY35C / SY35U

SPECIFICATION

SY35C LIFTING CAPACITIES - DOZER BLADE DOWN
BOOM 2,400MM / ARM 1,650MM / UNDERCARRIAGE 1,550MM

Load Point Height (B)		Radius (A) 1.0 m		2.0 m		3.0 m		4.0 m		Digging Reach Max	
4.0 m	kg									*633	*633
3.0 m	kg							*676	542	*539	521
2.0 m	kg					*773	*773	*702	535	*519	444
1.0 m	kg					*1038	776	*789	515	*542	419
Ground line	kg			*1957	1315	*1221	738	*850	498	*613	431
–1.0 m	kg	*1586	*1568	*2048	1310	*1206	725	*766	497	*758	495
–2.0 m	kg			*1472	1344	*837	747			*735	703

SY35C LIFTING CAPACITIES - DOZER BLADE UP
BOOM 2,400MM / ARM 1,650MM / UNDERCARRIAGE 1,550MM

Load Point Height (B)		Radius (A) 1.0 m		2.0 m		3.0 m		4.0 m		Digging Reach Max	
4.0 m	kg									*633	*633
3.0 m	kg							650	542	*539	521
2.0 m	kg					*773	*773	641	535	*519	444
1.0 m	kg					949	776	620	515	*542	419
Ground line	kg			1709	1315	908	738	603	498	520	431
–1.0 m	kg	*1586	*1568	1704	1310	895	725	601	497	598	495
–2.0 m	kg			*1472	1344	*837	747			*735	703

SY35C LIFTING CAPACITIES - DOZER BLADE DOWN
BOOM 2,400MM / ARM 1,650MM / UNDERCARRIAGE 1,720MM

Load Point Height (B)		Radius (A) 1.0 m		2.0 m		3.0 m		4.0 m		Digging Reach Max	
4.0 m	kg									*633	*633
3.0 m	kg							*673	618	*539	*539
2.0 m	kg					*773	*773	*702	609	*519	507
1.0 m	kg					*1038	891	*789	589	*542	479
Ground line	kg			*1957	1560	*1221	853	*850	572	*613	494
–1.0 m	kg	*1586	*1568	*2048	1567	*1206	841	*766	571	*758	568
–2.0 m	kg			*1472	*1472	*837	*837			*735	*735

SY35C LIFTING CAPACITIES - DOZER BLADE UP
BOOM 2,400MM / ARM 1,650MM / UNDERCARRIAGE 1,720MM

Load Point Height (B)		Radius (A) 1.0 m		2.0 m		3.0 m		4.0 m		Digging Reach Max	
4.0 m	kg									*633	*633
3.0 m	kg							651	618	*539	*539
2.0 m	kg					*773	*773	643	609	*519	507
1.0 m	kg					951	891	622	589	*542	479
Ground line	kg			1723	1560	910	853	605	572	521	494
–1.0 m	kg	*1586	*1568	1707	1567	897	841	603	571	600	568
–2.0 m	kg			*1472	*1472	*837	*837			*735	*735

SY35C / SY35U

SPECIFICATION

DIMENSIONS (TRANSPORT) SY35U

	Arm Length	1,400 mm	1,650 mm	1,650 mm
	Boom Length	2,540 mm	2,540 mm	2,400 mm
A	Transport length	4,905 mm	4,870 mm	4,730 mm
B	Transport width	1,720 mm	1,720 mm	1,720 mm
C	Height over cabin / ROPS	2,555 mm	2,555 mm	2,555 mm
D	Blade height	355 mm	355 mm	355 mm
E	Track width	300 mm	300 mm	300 mm
F	Track gauge	1,420 mm	1,420 mm	1,420 mm
G	Min. ground clearance	295 mm	295 mm	295 mm
H	Tail swing radius	860 mm	860 mm	860 mm
I	Track ground length	1,670 mm	1,670 mm	1,670 mm
J	Track length	2,155 mm	2,155 mm	2,155 mm
	Track height	510 mm	510 mm	510 mm
	Counterweight clearance	560 mm	560 mm	560 mm
	Height of boom – transport	1,815 mm	1,980 mm	1,980 mm
	Undercarriage width (blade)	1,720 mm	1,720 mm	1,720 mm
	Horizontal distance to blade	1,500 mm	1,500 mm	1,500 mm
	Engine cover height	1,610 mm	1,610 mm	1,610 mm

DIMENSIONS (TRANSPORT) SY35C

	Arm Length	1,400 mm	1,400 mm	1,650 mm	1,650 mm	1,650 mm	1,650 mm
	Boom Length	2,540 mm	2,540 mm	2,400 mm	2,400 mm	2,540 mm	2,540 mm
	Undercarriage width	1,720 mm	1,550 mm	1,720 mm	1,550 mm	1,720 mm	1,550 mm
A	Transport length	4,680 mm	4,680 mm	4,510 mm	4,505 mm	4,650 mm	4,645 mm
B	Transport width	1,720 mm	1,550 mm	1,720 mm	1,550 mm	1,720 mm	1,550 mm
C	Height over cabin / ROPS	2,555 mm	2,545 mm	2,555 mm	2,545 mm	2,555 mm	2,545 mm
D	Blade height	355 mm	350 mm	350 mm	350 mm	350 mm	350 mm
E	Track width	300 mm	300 mm	300 mm	300 mm	300 mm	300 mm
F	Track gauge	1,420 mm	1,250 mm	1,420 mm	1,250 mm	1,420 mm	1,250 mm
G	Min. ground clearance	295 mm	280 mm	295 mm	280 mm	295 mm	280 mm
H	Tail swing radius	1,100 mm	1,100 mm	1,100mm	1,100 mm	1,100 mm	1,100 mm
I	Track ground length	1,670 mm	1,670 mm	1,670 mm	1,670 mm	1,670 mm	1,670 mm
J	Track length	2,155 mm	2,155 mm	2,155 mm	2,155 mm	2,155 mm	2,155 mm
	Track height	510 mm	510 mm	510 mm	510 mm	510 mm	510 mm
	Counterweight clearance	560 mm	560 mm	560 mm	560 mm	560 mm	560 mm
	Height of boom – transport	1,815 mm	1,810 mm	1,980 mm	1,980 mm	1,815 mm	1,980 mm
	Undercarriage width (blade)	1,720 mm	1,550 mm	1,720 mm	1,550 mm	1,720 mm	1,550 mm
	Horizontal distance to blade	1,500 mm	1,500 mm	1,500 mm	1,500 mm	1,500 mm	1,500 mm
	Engine cover height	1,610 mm	1,600 mm	1,610 mm	1,600 mm	1,610 mm	1,600 mm

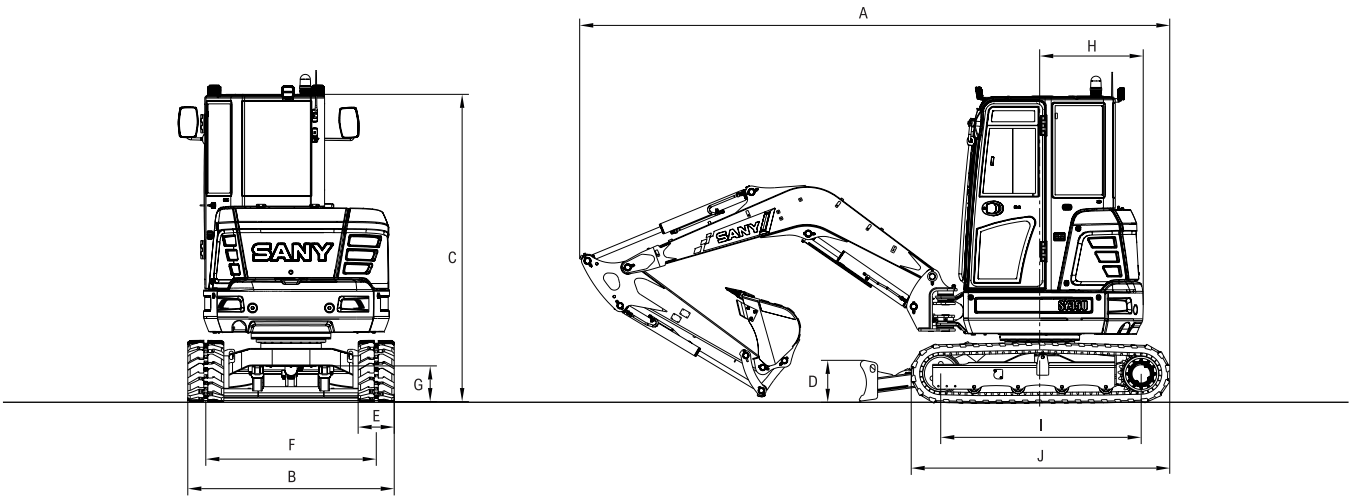

SY35C / SY35U

SPECIFICATION

WORKING AREA SY35U

	Arm length	1,400 mm	1,650 mm	1,650 mm
	Boom length	2,540 mm	2,540 mm	2,400 mm
A	Max. digging height	4,865 mm	5,020 mm	5,010 mm
B	Max. dumping height	3,445 mm	3,600 mm	3,580 mm
C	Max. digging depth	3,115 mm	3,365 mm	3,170 mm
D	Max. vertical digging depth	2,640 mm	2,860 mm	2,740 mm
E	Max. digging reach	5,480 mm	5,720 mm	5,575 mm
F	Min. swing radius	2,465 mm	2,500 mm	2,395 mm
G	Maximum height at minimum swing radius	3,695 mm	3,695 mm	3,625 mm
H	Max. clearance with blade up	375 mm	375 mm	375 mm
I	Max. blade digging depth (blade down)	370 mm	370 mm	370 mm
J	Offset boom (L)	765 mm	765 mm	765 mm
K	Offset boom (R)	605 mm	605 mm	605 mm
	Max. boom swing angle (L)	57°	57°	57°
	Max. boom swing angle (R)	63°	63°	63°

WORKING AREA SY35C

	Arm length	1,400 mm	1,400 mm	1,650 mm	1,650 mm	1,650 mm	1,650 mm
	Boom length	2,540 mm	2,540 mm	2,400 mm	2,400 mm	2,540 mm	2,540 mm
	Undercarriage width	1,720 mm	1,550 mm	1,720 mm	1,550 mm	1,720 mm	1,550 mm
A	Max. digging height	4,865 mm	4,855 mm	5,005 mm	4,995 mm	5,020 mm	5,005 mm
B	Max. dumping height	3,445 mm	3,435 mm	3,575 mm	3,565 mm	3,600 mm	3,585 mm
C	Max. digging depth	3,115 mm	3,125 mm	3,170 mm	3,180 mm	3,365 mm	3,375 mm
D	Max. vertical digging depth	2,640 mm	2,650 mm	2,740 mm	2,750 mm	2,860 mm	2,875 mm
E	Max. digging reach	5,240 mm	5,240 mm	5,340 mm	5,335 mm	5,480 mm	5,480 mm
F	Min. swing radius	2,230 mm	2,230 mm	2,155 mm	2,155 mm	2,260 mm	2,260 mm
G	Maximum height at minimum swing radius	3,695 mm	3,680 mm	3,625 mm	3,615 mm	3,695 mm	3,680 mm
H	Max. clearance with blade up	375 mm	375 mm	375 mm	375 mm	375 mm	375 mm
I	Max. blade digging depth (blade down)	370 mm	370 mm	370 mm	370 mm	370 mm	370 mm
J	Offset boom (L)	525 mm	525 mm	525 mm	525 mm	525 mm	525 mm
K	Offset boom (R)	425 mm	425 mm	425 mm	425 mm	425 mm	425 mm
	Max. boom swing angle (L)	57°	57°	57°	57°	57°	57°
	Max. boom swing angle (R)	63°	63°	63°	63°	63°	63°

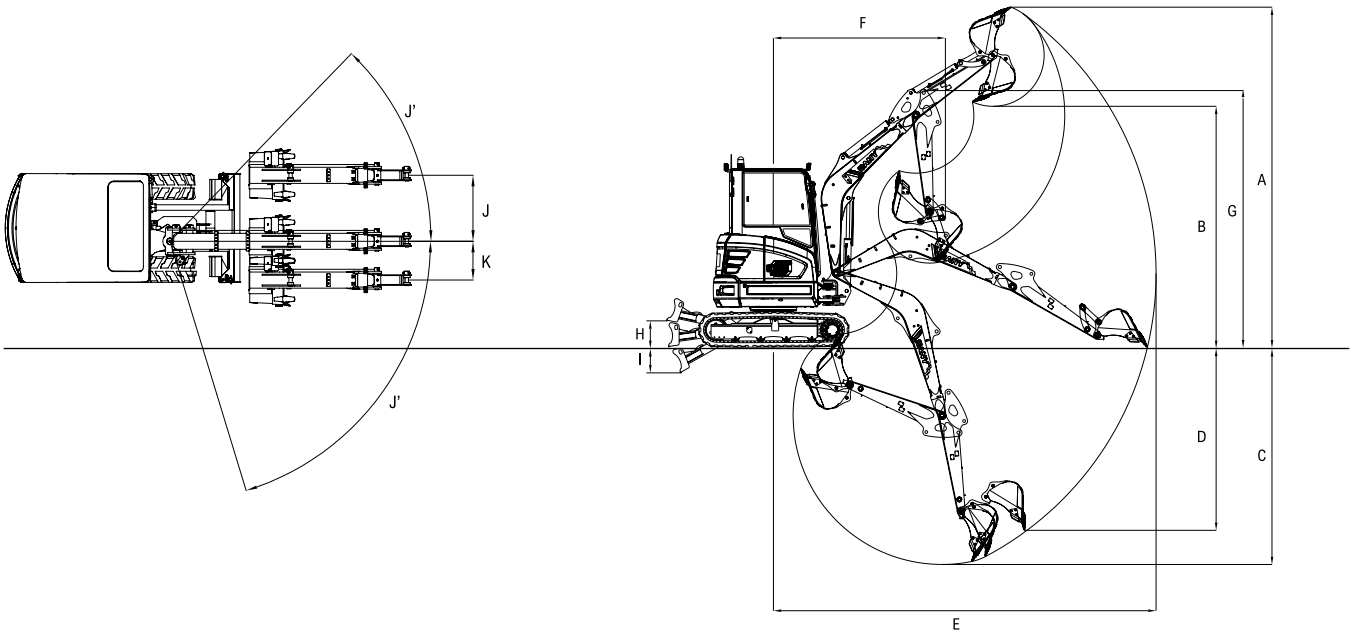

SY35C / SY35U

STANDARD/OPTIONAL EQUIPMENT

OPERATORS COMFORT / CAB/ CANOPY

	SY35U	SY35U Canopy	SY35C	SY35C Canopy
Suspended seat	•	•	•	•
Manual air conditioning system	•	n/a	•	n/a
Bluetooth radio & speaker	•	•	•	•
Adjustable armrests	•	•	•	•
12V outlets	•	•	•	•
Wiper	•	•	•	•
AUX 1 on joystick	•	•	•	•
AUX 2 on joystick	•	•	•	•
Stored hydraulic settings for attachments	•	•	•	•
Cup holder	•	•	•	•

WORKING LIGHTS

	SY35U	SY35U Canopy	SY35C	SY35U Canopy
Lights x 2 – front (LED)	•	•	•	•
Lights x 1 – rear (LED)	•	•	•	•
Lights x 1 – boom (LED)	•	•	•	•
Magnetic beacon	•	•	•	•

UNDERCARRIAGE

	SY35U	SY35U Canopy	SY35C	SY35C Canopy
Rubber tracks (300 mm)	•	•	•	•
Steel tracks (300 mm)	OPT	OPT	OPT	OPT
Cylinder guards – dozer blade	•	•	•	•
Holes / loops for fixing	•	•	•	•
1550 mm undercarriage	n/a	n/a	OPT	OPT

ENGINE

	SY35U	SY35U Canopy	SY35C	SY35C Canopy
Auto idle	•	•	•	•
Diesel filter	•	•	•	•
Air filter	•	•	•	•

SAFETY

	SY35U	SY35U Canopy	SY35C	SY35C Canopy
ROPS and FOPS cab	•	n/a	•	n/a
ROPS and TOPS Canopy	n/a	•	n/a	•
Battery master switch	•	•	•	•
Travel alarm	•	•	•	•
Emergency stop button	•	•	•	•
Retractable seatbelt	•	•	•	•
Seatbelt alarm	•	•	•	•
Lockable bonnet	•	•	•	•
All-round mirrors	•	•	•	•
EVI telematics	•	•	•	•

WORKING EQUIPMENT

	SY35U	SY35U Canopy	SY35C	SY35C Canopy
Boom and arm load holding valves with overload indicator	•	•	•	•
Cylinder guards – boom	•	•	•	•
Double acting circuit for hydraulic quick coupler with piping	•	•	•	•
Breaker & shear line proportional on joystick with piping	•	•	•	•
Rotation line proportional on joystick with piping	•	•	•	•
Flow adjustment for attachments	•	•	•	•
1400 mm Arm	•	•	•	•
1650 mm Arm	OPT	OPT	OPT	OPT
200kg bolt on counterweight	OPT	OPT	n/a	n/a
Angled Dozer Blade	OPT	OPT	OPT	OPT

WORKING EQUIPMENT

	SY35U	SY35U Canopy	SY35C	SY35C Canopy
Swing brake	•	•	•	•
2 speed travel	•	•	•	•
Hydraulic pre-pressure operating joysticks	•	•	•	•
Main filter	•	•	•	•

The standard and optional equipment can differ depending on the country in which the machine is delivered. Please contact your local dealer for more information.


SANY
SANY
SY135U

SANY

FORGING THE FUTURE TOGETHER

SANY HEAVY MACHINERY (UK) LTD
Unit 6, M8 Interlink Estate,
Coatbridge, Glasgow, ML5 4RP
Tel: 0330 2021 318
Email: info@sanyuk.com

Sanyuk.com

Not all products are available in all markets.
As part of our continuous improvement process, we reserve the right to modify specifications and designs without giving prior notice. Machines shown may feature additional options other than the standard machine specification.

HEX - SY35C/SY35U - 10.2026 - EU - V2