SANY

SY26U/SY26C

MINI EXCAVATOR

Max. Gross Power
14.6 kW / 2,400 rpm

Operating Weight
2,700 kg (SY26C) / 2,660 kg (SY26U)

Max. Dig Depth
2,810 mm



SANY:

FORGING THE FUTURE TOGETHER

Founded in 1989, SANY has grown into one of the world's largest construction equipment manufacturers, with global R&D and production – including European facilities – and machines working in 150+ countries. Our range spans excavators, road and port machinery, and cranes, built with proven manufacturing heritage and modern quality systems.

A GLOBAL LEADER BEHIND EVERY RANGE

From micro excavators to high-tonnage earthmovers, cranes, telehandlers, concrete machinery, road equipment and more, SANY's worldwide product range reflects decades of innovation, investment, and real-world experience.

This broad international range is proven on job sites in over 150 countries, ensuring every machine delivered to Europe is backed by extensive testing, real-world performance and the strength of a global supply chain.

ENGINEERED FOR OUR EUROPEAN CUSTOMERS

Every SANY machine destined for Europe is engineered to meet European regulations and real-world use cases – from CE and Stage V compliance to region-specific specifications and options.

For European construction customers, this worldwide capability translates directly into trust. SANY selects and engineers its product line specifically for local requirements, combining global innovation with European-quality standards, dealer support and service.

GLOBAL MANUFACTURING EXCELLENCE

SANY's long-standing commitment to quality and innovation – supported by advanced intelligent manufacturing and a sustained 5-7% of annual revenue reinvested into R&D – results in machines that deliver reliability, efficiency, and consistent performance on site.

With state-of-the-art production facilities and rigorous global testing standards, every machine is built to withstand demanding conditions and deliver long-term value.

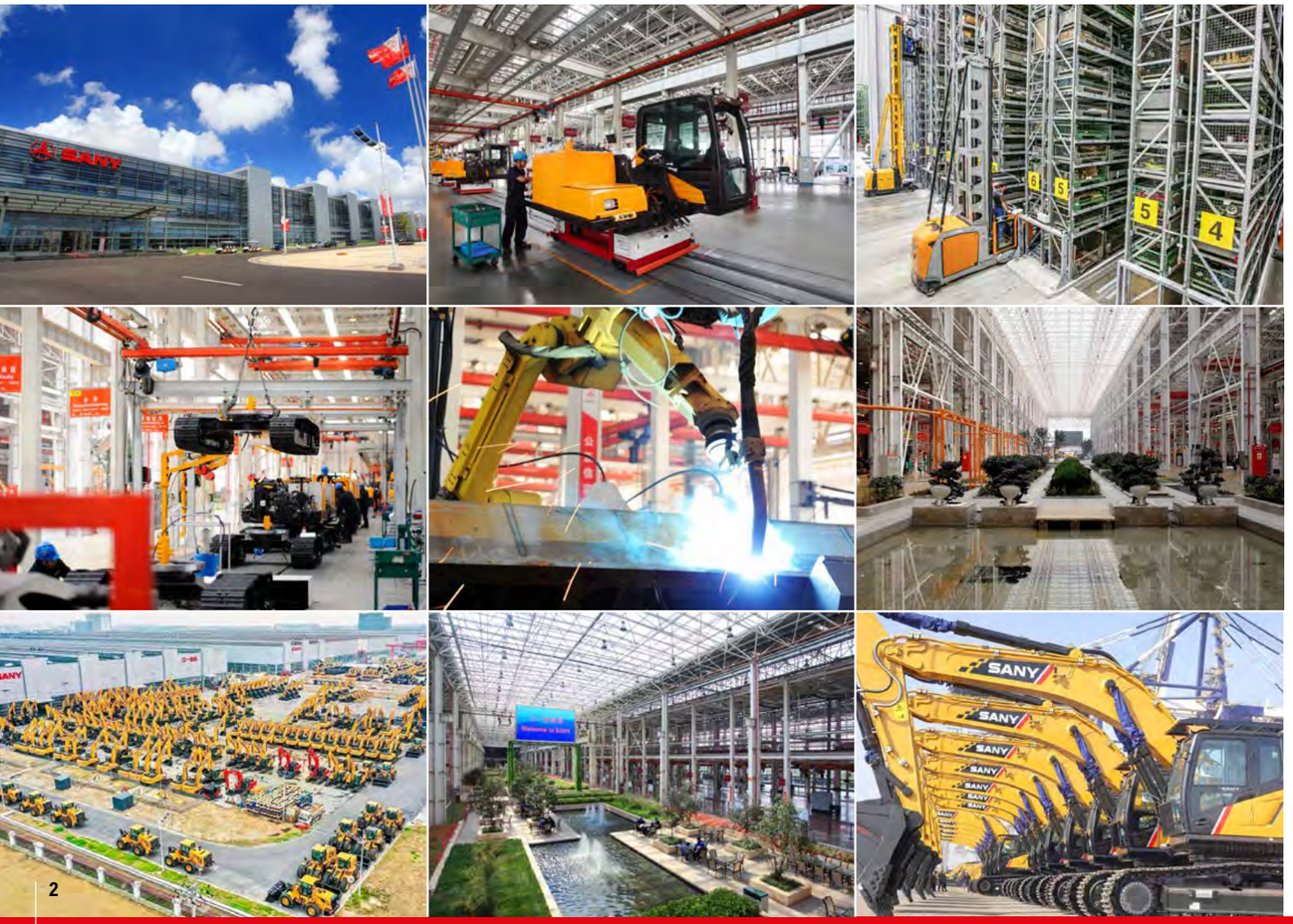

INTRODUCING THE

SY26U/SY26C

Reliable and easily transportable, our SY26U and SY26C mini excavators offer that perfect combination of compact size and powerful performance.

The ideal solution for construction, landscaping, agriculture and small jobsites, they bring big performance and allow you to work and load with confidence in areas where space might be limited. With their powerful YANMAR engines, efficient load sensing hydraulic system and wealth of standard features these SANY mini excavators are built to minimise operating expenses and maximise uptime.



WHY CHOOSE SANY MINI EXCAVATORS

WORLD RENOWNED COMPONENTS

SANY uses proven, top-tier components to deliver long-lasting reliability, meaning you benefit from fewer breakdowns, longer service life, and lower ownership costs.

GREAT VALUE, UNCOMPROMISED QUALITY

You can have confidence in your return on investment. SANY mini excavators are loaded with the latest innovations to help reduce costs, increase productivity and protect resale value.

INDUSTRY LEADING 5 YEAR WARRANTY

Built to last, and backed by an industry-leading warranty – giving you lower risk, predictable costs, and confidence on every job.

LOW OPERATING COSTS

Simple engineering, readily available parts, and low fuel consumption reduce ongoing running costs, a major advantage in Europe's high-cost markets.

LOCAL SUPPORT

Europe-wide expert dealers and value-added aftermarket support keep your machine running, minimise downtime, and simplify ownership.

STANDARD ADVANCED FEATURES

SANY excavators include all essential features as standard, no costly add-ons or custom tweaks required.

SY26U / SY26C

PRODUCTIVITY

Designed for tight spaces, the SY26U's zero tail swing keeps the rear of the machine safely within the track width, while the SY26C's reduced tail swing offers extra stability. Both combine compact size with impressive strength and performance.



COMPACT DIMENSIONS

With compact dimensions – and zero tailswing on the SY26U – you can access tight sites, work flush to walls or obstacles, and minimise repositioning for faster setup – all with low ground impact.

Integrated tie-down points on the track frame and dozer blade simplify secure trailering – cutting loading time, improving load restraint compliance, and reducing risk of damage during transport.

SANY's swing boom design lets you offset the boom 61° left or 49° right on the SY26C and 65° left or 45° right on the SY26U so you can dig alongside walls and in tight spaces without rotating / repositioning the machine, reducing ground disturbance.

HYDRAULICS DESIGNED FOR PRODUCTIVITY

SANY's twin auxiliary hydraulics as standard allow you to operate a wider range of attachments with powered movement in both directions, giving you reversible control and faster task changes.

SANY's hydraulic quick hitch enables in-cab attachment changes within seconds, eliminating manual pin removal, reducing exposure to pinch points, and minimising downtime between tasks.

VERSATILE OPERATION

SY26C and SY26U come factory-equipped to make them plug-and-play with most common attachments, including – breakers, grapples, tilt buckets, augers.



SY26U / SY26C

EFFICIENCY

Consuming less, storing more, the SY26C and SY26U are engineered for exceptional efficiency. Each machine combines an ultra-efficient YANMAR 3TNV80F engine with smart fuel management and advanced hydraulic technology to maximise productivity while minimising operating costs.

CONSUMING LESS, STORING MORE

Equipped with a fuel-saving YANMAR 3TNV80F engine, the SY26C and SY26U delivers 14.6 kW of high-performance power at 2,400 rpm.

A 34-litre fuel tank and efficient consumption allow for extended refuelling intervals, cutting downtime and fuel runs so the machine stays productive longer between stops.

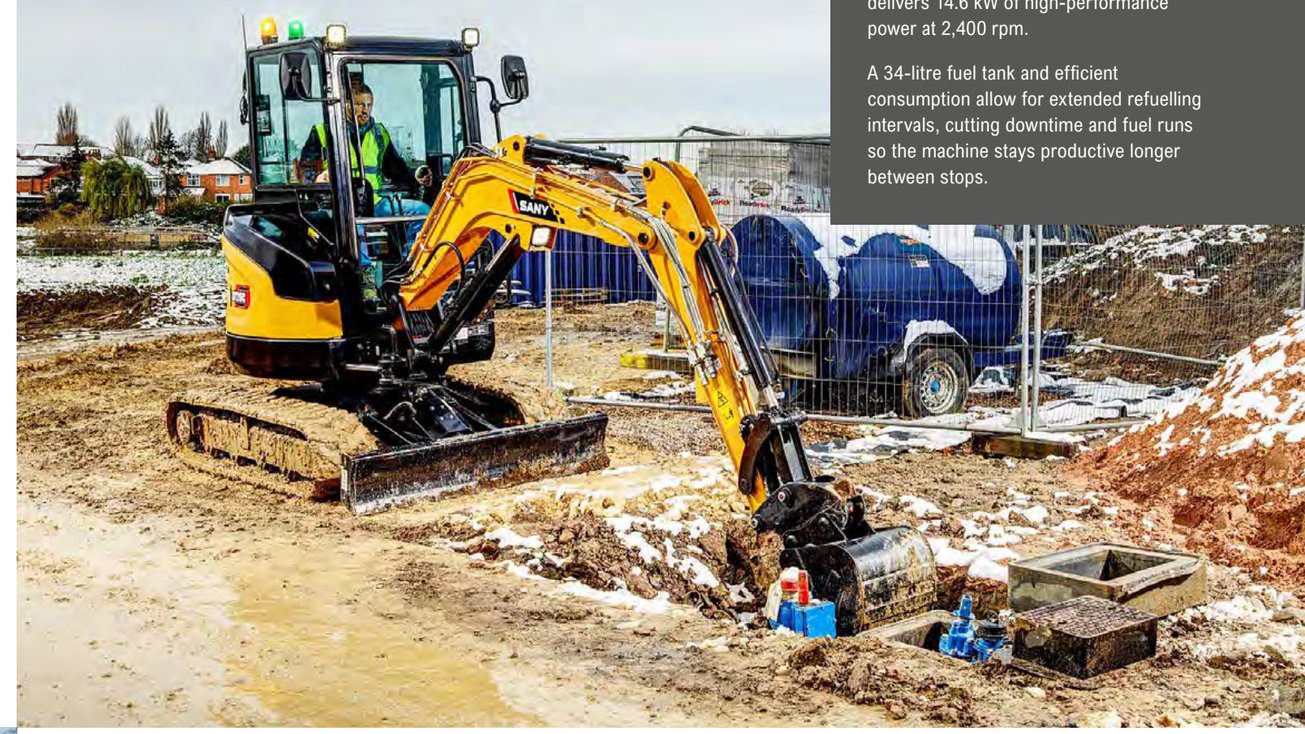

EFFICIENT OPERATION

SANY's two-speed tracking lets the operator choose high or low travel to match terrain and task reduces unnecessary revs and therefore fuel usage.



ENERGY-EFFICIENT HYDRAULICS

SANY's load-sensing hydraulics deliver only the flow and pressure the working circuits need, so the system wastes less energy and burns less fuel.

A well-matched engine and hydraulic system that measures pump output to demand, reduces wasted flow and fuel resulting in lower running costs for the customer.



SY26U / SY26C

OPERATOR ENVIRONMENT

Experience the elevated operator environment of the SY26. Every element – from the supportive seat to the well-positioned controls – is engineered to maximise efficiency, enhance safety, and deliver all-day comfort, helping operators work with greater ease and precision. The SY26C is equipped with a full operator's cab, while the SY26U offers both cab and canopy configurations to suit different working environments.



PREMIUM COMFORT

↑ The ergonomic operator's cab of the SY26 excavators features a high-back seat and adjustable armrests, designed to keep operators comfortable, focused, and productive.

A standard-fit heater keeps the cab warm and comfortable, ensuring operators remain productive in all weather conditions.

Joysticks with dual proportional control circuits enable safe and precise operation, while the floating blade function allows for faster, smoother levelling with less operator effort – improving finish quality and reducing fatigue.



↑ Clear instrumentation and a high-resolution colour display make machine operation easier and more intuitive, helping operators work with confidence and precision.

EVERYDAY EASE

↑ For added comfort and practicality, the SY26 mini excavators come equipped with a radio, USB socket, cup holder, and a storage compartment, keeping essential items within easy reach.

The quiet, low-vibration engine reduces noise and vibration levels to a minimum, creating a more comfortable operating environment and allowing the machine to work effectively in noise-sensitive areas.

All-round mirrors provide clear visibility of the surrounding workspace, improving operator awareness and safety on site.

SY26U / SY26C

SAFETY & SECURITY

From reinforced structural components to advanced stability and security systems, every aspect is designed to protect both operator and machine in demanding environments. Clear sightlines, strengthened structure, and well-positioned safety aids further enhance operator awareness, reducing risk and supporting confident decision-making on busy worksites.



PROTECTING BYSTANDERS

← Energy efficient LED work lights are positioned on the front and rear of cab and boom for maximum versatility in poor or low light conditions.

A travel alarm and rotating warning beacon help to increase visibility, attract attention and ensure safety on site.

STRUCTURAL INTEGRITY

↑ ROPS, TOPS and FOPS certification ensures the SY26 excavators meet stringent rollover and tip over protection standards. The SY26U model also accommodates an optional ROPS and TOPS certified canopy for applications requiring alternative protection configurations.

Heavy-duty steel bodywork provides robust protection against on-site damage, safeguarding vital structures and contributing to reduced lifetime ownership costs.

EMERGENCY SHUTDOWN

Featuring both a battery disconnect switch and an emergency stop button, the system allows immediate power isolation to enhance operator and site safety.

ADVANCED SECURITY

Lockable service doors protect critical components and fuel systems, preventing unauthorised access and enhancing site security.

Backed by the CESAR Datatag Scheme for proven theft deterrence and equipped with CESAR ECV, these machines allow swift and dependable verification of emissions category.

← Advanced anti-theft EVI telematics employ GPS tracking and configurable geofencing to safeguard the machine from theft and unauthorised use.

SY26U / SY26C

SERVICE & MAINTENANCE

Designed for optimal uptime, SANY excavators feature wide service doors, clearly accessible service points, and extended service intervals to simplify maintenance and maximise machine availability. Premium, high-quality components consistent throughout the range further enhance durability and reliability, ensuring reliable performance shift after shift.



MAINTENANCE MADE EASY

SANY mini excavators are engineered for streamlined service and maintenance, with design features that make routine upkeep faster and more efficient.

A wide-opening engine door provides ground-level access to all key service points, ensuring that daily checks are quick, simple, and easy to perform.

ROBUST STRUCTURES

Integrated guarding for the dozer blade and hydraulic cylinders provides robust protection against on-site impacts, minimising the risk of component damage, unplanned downtime, and expensive repair work.

An X-beam configuration with a high-strength box-section structure provides exceptional durability and superior resistance to torsional forces.

COMMON, PREMIUM COMPONENTS

Produced in advanced manufacturing facilities in China, SANY excavators are built for high quality and lasting durability, utilising high-spec components from reputable global manufacturers.

Shared componentry across the range, combined with an extensive European dealer network, ensures rapid response and efficient turnaround for any machine repair.





INCREASED WORKING HOURS

With 500-hour service intervals, maintenance frequency is reduced, lowering operating costs and improving machine availability.

Real-time health alerts, remote diagnostics, and scheduled maintenance via SANY EVI telematics work together to enhance reliability and extend machine life.

SY26U / SY26C

ATTACHMENTS

SANY machines offer extended capability through a broad selection of easily interchangeable attachments. This range enables efficient performance across varied tasks such as digging, drilling, land clearing, material handling, and demolition.

BUCKETS

SANY provides a complete range of excavator buckets designed to enhance your machine's efficiency. From general-purpose digging buckets to more specialised options, they enable you to tackle a wide variety of job sites.

QUICK HITCH

SANY quick hitches enable rapid attachment changes, helping you get more done in less time. By reducing manual labour and ensuring a secure fit, they expand the machine's versatility and keep your operations running smoothly.

BREAKERS

SANY breakers have been designed to deliver powerful breaking performance, long-lasting durability, and high efficiency. They are suitable for a wide range of applications such as quarry, tunneling, civil construction, trenching, road & landscaping.

GRABS

SANY excavator grabs deliver powerful, reliable material handling with high clamping force, smooth hydraulic control and durable steel construction. The result is a cost-effective, high-performance attachment that boosts productivity and control on every job.*

*SANY attachment options may vary depending on country.

SY26U / SY26C

YOUR UPTIME. OUR PRIORITY.

Rely on SANY's value-added aftermarket services to keep your equipment operating at peak efficiency. From proactive maintenance to reducing unexpected downtime and controlling operating costs, we provide the support your business depends on. Our European service solutions further boost performance, streamline maintenance tasks, and improve profitability across your fleet.

5 YEAR WARRANTY

Built on a global reputation for reliability and durability, SANY excavators come with an unmatched 5-year warranty* – one of the strongest in the industry.

It's a clear statement of the confidence we have in our machines and our commitment to your uptime. Your investment is protected from day one, giving you the assurance that if an issue arises, you're fully covered.

*Terms and conditions apply.

SERVICE AND SUPPORT

SANY's extensive network of certified technicians and dealer partners provides on-site service and technical expertise designed to minimise downtime and maintain peak machine performance.

Working in coordination with our advanced manufacturing facilities in China, our European teams combine global engineering capability with practical local support.

SANY GENUINE PARTS

SANY genuine parts are engineered, rigorously tested, and manufactured to the exact specifications required by your machine. Their precise fit and compatibility guarantee maximum performance and system integrity.

By maintaining correct operational tolerances, they enhance on-site safety and significantly reduce the risk of unplanned failures or downtime. All genuine parts are supported by a 12-month warranty for added assurance.

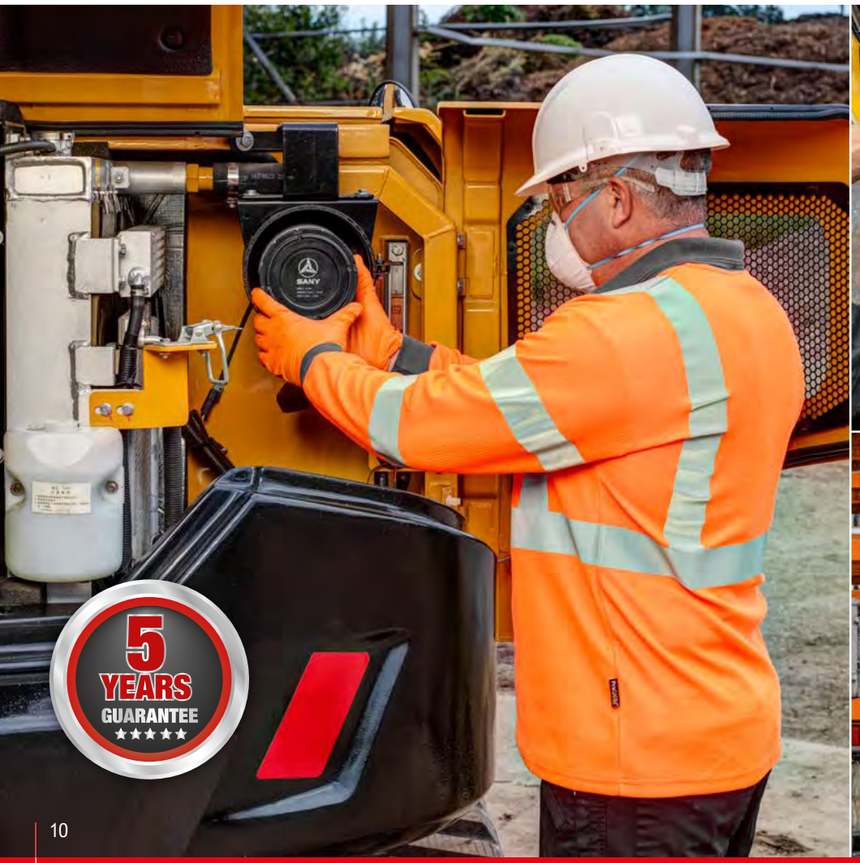



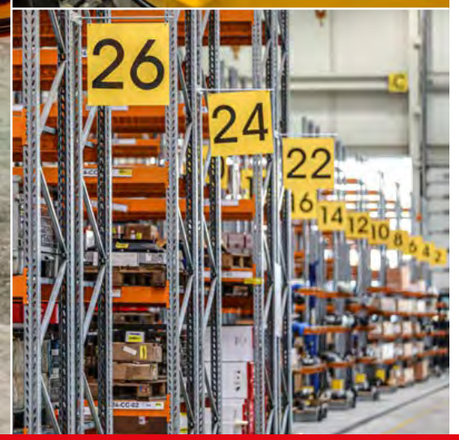

SY26U / SY26C

INTELLIGENT SUPPORT

SANY's connected tools give you clarity, confidence, and control on every project. ROOTPILOT brings precision to the bucket; EVI Telematics brings visibility to the fleet. Together, they reduce downtime, cut costs, and boost productivity. Smart technology – driving your success.



EVI e.vision

Designed exclusively for Europe, our digital fleet management system EVI gives you complete visibility of your machines whenever and wherever you need it. By simplifying fleet oversight, it enables better decision-making, lowers costs, and improves uptime across your operations. With built-in safety and security features that let you monitor location and usage in real time, you gain greater control and peace of mind.

Key benefits include:

- Enhanced fleet visibility and remote machine management
- Set authorised operating hours and create geofenced security zones to reduce theft risk and misuse
- Greater visibility of routine checks and machine health
- Multi-channel, real-time communication for faster decision-making
- Operating report analysis for smarter, data-led decision-making
- Customer account management for personalised, data-backed communication

SANY ROOTPILOT

SANY ROOTPILOT is a high-precision 3D machine-control system that uses GNSS, IMU sensors, and smart algorithms to guide excavators in real time. It gives operators clear, intuitive 3D feedback for faster, safer, and more accurate digging.

ROOTPILOT installs quickly, works with multiple machines and attachments, and syncs designs through the cloud so every operator works from the same plan. It's ideal for highways, municipal works, and foundation projects where precision is critical.

Available in Fundamental and Premium versions, ROOTPILOT supports everything from basic grading to full 3D model guidance, offsets, layer control, and complex digital designs.

Main customer benefits:

- ±3 cm accuracy for first-time-right excavation
- Avoidance of underground utilities and hazards
- Lower fuel, labour, and rework costs
- Faster production with fewer survey checks
- Works with 2D or full 3D design models
- Boosts operator confidence and consistency

SY26U / SY26C

SPECIFICATION

ENGINE

	SY26U	SY26C
Model	YANMAR 3TNV80F	YANMAR 3TNV80F
Type	In-line, water-cooled, four-stroke, naturally aspirated, diesel engine	Water-cooled three-stroke diesel engine with turbulence chamber fuel injection
Exhaust emissions	Stage V	Stage V
Rated power	14.6 / 2,400 rpm	14.6 / 2,400 rpm
Max. torque	65.3 Nm / 1,800 rpm	65.3 Nm / 1,800 rpm
Displacement	1,267 cm³	1,267 cm³
Batteries	1 × 12V / 60Ah	1 × 12V / 60Ah

HYDRAULIC SYSTEM

	SY26U	SY26C
Main pump	Variable displacement axial piston pump	Variable displacement axial piston pump
Max. oil flow	78.0 L/min	78.0 L/min
Max. oil flow (AUX 1)	42.5 L/min	42.5 L/min
Max. oil flow (AUX 2)	42.5 L/min	42.5 L/min
Travel motor	Variable displacement axial piston motor	Variable displacement axial piston motor
Rotation device	Axial piston motor with parking brake	Axial piston motor with parking brake

PERFORMANCE

	SY26U	SY26C
Swing speed	10 rpm	10 rpm
Max. travel speed	High 4.5 km/h, Slow 2.6 km/h	High 4.5 km/h, Slow 2.6 km/h
Max. travel force	23 kN	23 kN
Gradeability	58%/30°	58%/30°
Bucket capacity	0.07 m³	0.07 m³
Ground pressure	25.6 Kpa	25.9 Kpa
Bucket digging force (ISO)	27.9 kN	27.9 kN
Arm digging force (ISO)	14.2 kN	14.2 kN

SERVICE REFILL CAPACITIES

	SY26U	SY26C
Fuel tank	34 L	34 L
Engine coolant	5.4 L	5.4 L
Engine oil	3.4 L	3.4 L
Drive (per side)	0.6 L	0.6 L
Hydraulic system	43 L	43 L

Based on theoretical calculation at max flow with no load.

Subject to alterations.

In the interest of continual equipment development, SANY reserves the right to change these specifications at any time without prior notification.

OPERATING WEIGHT

	SY26U	SY26C
Cab	2,660 kg	2,700 kg
Canopy	2,560 kg	

Note: Includes 75kg (165 lb) operator, full fuel tank and excludes any attachments or hitch.

UNDER & UPPER STRUCTURE

	SY26U	SY26C
Boom length	2100 mm	2100 mm
Arm length	1300 mm	1300 mm
Bottom rollers	4	4
Rotation device	Axial piston motor, planetary gear, single-row slewing ring, hydraulic parking brake	Axial piston motor, planetary gear, single-row slewing ring, hydraulic parking brake
Undercarriage	Reinforced lower structure, welded drive frame	Reinforced lower structure, welded drive frame

RELIEF VALVE SETTINGS

	SY26U	SY26C
Implement circuit	24.5 MPa	24.5 MPa
Swing circuit	19.6 MPa	19.6 MPa
Travel circuit	24.5 MPa	24.5 MPa
Pilot circuit	3.5 MPa	3.5 MPa

SOUND LEVEL

	SY26U	SY26C
Noise level inside cabin	76 dB(A)	76 dB(A)
Noise guaranteed value	93 dB(A)	93 dB(A)

SANY

SY26U / SY26C

SPECIFICATION

SY26U LIFTING CAPACITIES - DOZER BLADE DOWN

Load Point Height (B)		Radius (A) 2.0 m		Radius (A) 3.0 m		Radius (A) 4.0 m		Digging Reach Max	
4.0 m	kg							693*	488
3.0 m	kg			623*	393			540*	305
2.0 m	kg			707*	384	501*	236	493*	236
1.0 m	kg			937*	352	717*	229	507*	214
Ground line	kg	1521*	598	1095*	333	732*	223	582*	219
–1.0 m	kg	1807*	603	1012*	331			730*	264

SY26U LIFTING CAPACITIES - DOZER BLADE UP

Load Point Height (B)		Radius (A) 2.0 m		Radius (A) 3.0 m		Radius (A) 4.0 m		Digging Reach Max	
4.0 m	kg							693*	488
3.0 m	kg			402	393			313	305
2.0 m	kg			391	384	242	236	242	236
1.0 m	kg			367	352	237	229	221	214
Ground line	kg	649	598	348	333	231	223	228	219
–1.0 m	kg	654	603	346	331			275	264

SY26C LIFTING CAPACITIES - DOZER BLADE DOWN

Load Point Height (B)		Radius (A) 2.0 m		Radius (A) 3.0 m		Radius (A) 4.0 m		Digging Reach Max	
4.0 m	kg							666*	576
3.0 m	kg			626*	464			525*	360
2.0 m	kg			693*	453			481*	278
1.0 m	kg	1588*	800	884*	414	687*	270	497*	252
Ground line	kg	1839*	752	1010*	392			571*	259
–1.0 m	kg	1601*	757	921*	390			712*	311

SY26C LIFTING CAPACITIES - DOZER BLADE UP

Load Point Height (B)		Radius (A) 2.0 m		Radius (A) 3.0 m		Radius (A) 4.0 m		Digging Reach Max	
4.0 m	kg							666*	576
3.0 m	kg			510	464			525	360
2.0 m	kg			438	453			481	278
1.0 m	kg	808	800	422	414	272	270	497	252
Ground line	kg	764	752	411	392			571	259
–1.0 m	kg	768	757	409	390			720	311

1. This capability is calculated according to GB/T 13331, ISO10567 standards. The limiting coefficient of the hydraulic system is 0.87, and the tipping coefficient is 0.75.
2. Marked with * is limited by hydraulic pressure, marked without * is limited by stability.
3. The lifting point is the support hole in front of the bucket rod (excluding the weight of the bucket). If there are additional accessories such as buckets, they should be deducted from the above lifting weight.
4. A- Radius of loading point (m), B- Loading point height (m).

SY26U / SY26C

SPECIFICATION

DIMENSIONS (TRANSPORT)

		SY26U	SY26C
A	Transport length	4285 mm	4160 mm
B	Transport width	1550 mm	1550 mm
C	Upper structure carriage width	1375 mm	1375 mm
D	Height over cabin/ROPS	2430 mm	2430 mm
E	Height of boom – transport	1620 mm	1620 mm
F	Track length	1960 mm	1960 mm
G	Tail length	775 mm	915 mm
H	Track gauge	1250 mm	1250 mm
I	Undercarriage width (blade)	1550 mm	1550 mm
J	Horizontal distance to blade	1295 mm	1295 mm
K	Blade height	300 mm	300 mm
L	Track height	445 mm	445 mm
M	Track pads width	300 mm	300 mm
N	Min. ground clearance	290 mm	290 mm
O	Counterweight clearance	555 mm	555 mm
P	Engine cover height	1460 mm	1460 mm
Q	Tail swing radius	775 mm	915 mm
R	Centre distance of tumblers	1560 mm	1560 mm

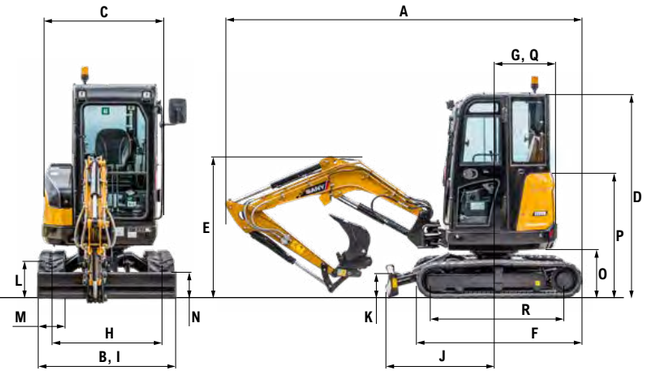

WORKING AREA

		SY26U	SY26C
A	Max. digging reach	4840 mm	4710 mm
B	Max. digging depth	2810 mm	2810 mm
C	Max. digging height	4405 mm	4405 mm
D	Max. dumping height	3130 mm	3130 mm
E	Min. dumping height	940 mm	940 mm
F	Max. vertical digging depth	2210 mm	2210 mm
G	Overall height over arm by min. swing radius	3200 mm	3200 mm
H	Arm head distance (equipment retracted)	1490 mm	1490 mm
I	Swing radius (L boom swing) Swing radius (R boom swing) Min. swing radius	1760 mm 1795 mm 2110 mm	1760 mm 1795 mm 2110 mm
J	Max. clearance when blade up	355 mm	355 mm
K	Max. depth of blade down	380 mm	380 mm
L	Offset boom (L) Offset boom (R)	730 mm 500 mm	565 mm 450 mm
	Max. boom swing angle (L) Max. boom swing angle (R)	65° 45°	61° 49°

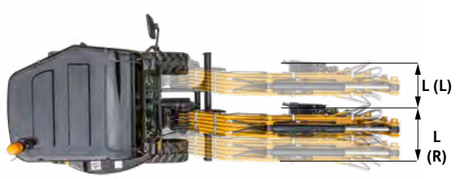

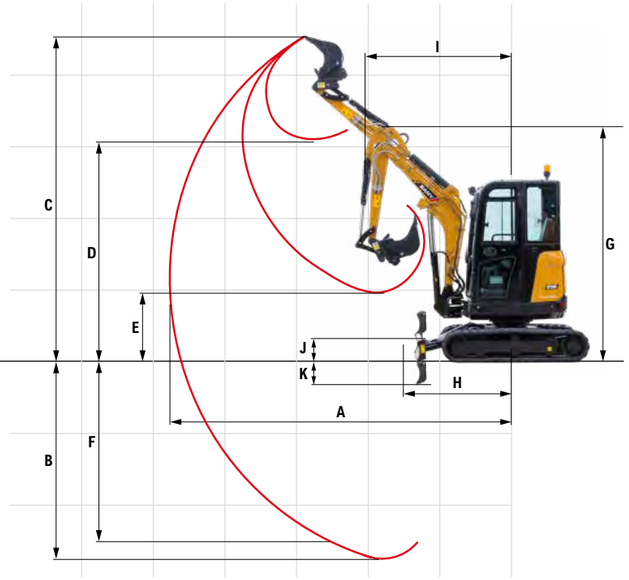

SY26U / SY26C

STANDARD/OPTIONAL EQUIPMENT

OPERATORS COMFORT / CAB

	SY26U	SY26U CANOPY	SY26C
Heater	•		•
Bluetooth radio & speaker	•		•
USB socket (music)	•		•
Armrests (adjustable)	•	•	•
Cup holder	•	•	•
12V outlets	•	•	•
Wiper	•		•
AUX 1 on Joystick	•	•	•
AUX 2 on Joystick	•	•	•
Suspended seat	•	•	•
Stored hydraulic settings for attachments	•	•	•
Up and over front window	•		•

WORKING LIGHTS

	SY26U	SY26U CANOPY	SY26C
Lights x 2 – front (LED)	•	•	•
Lights x 1 – boom (LED)	•	•	•
Lights x 1 – rear (LED)	•	•	•
Magnetic Beacon	•	•	•

UNDERCARRIAGE

	SY26U	SY26U CANOPY	SY26C
Rubber tracks (300 mm)	•	•	•
Steel tracks	OPT	OPT	OPT
Holes/loops for fixing	•	•	•

ENGINE

	SY26U	SY26U CANOPY	SY26C
Diesel filter	•	•	•
Air filter	•	•	•
Air filter guard	•	•	•

SAFETY & SECURITY

	SY26U	SY26U CANOPY	SY26C
Battery master switch	•	•	•
Travel alarm	•	•	•
Beacon lamp	•	•	•
Emergency stop button	•	•	•
Retractable seat belt	•	•	•
All-round mirrors	•	•	•
Lockable bonnet	•	•	•
EVI telematics system	•	•	•
ROPS, TOPS and FOPS cab	•		•
ROPS and TOPS canopy		•	

WORKING EQUIPMENT

	SY26U	SY26U CANOPY	SY26C
Hammer & shear line proportional on joystick (w/ piping)	•	•	•
Rotation line proportional on joystick (w/ piping)	•	•	•
Flow adjustment for attachments	•	•	•
Double-acting circuit for hydraulic quick coupler (w/ piping)	OPT	OPT	OPT
Boom and arm load holding valves w/ overload indicator	OPT	OPT	OPT
100 kg Counterweight	OPT	OPT	
190 kg Counterweight	OPT	OPT	

HYDRAULIC SYSTEM

	SY26U	SY26U CANOPY	SY26C
Swing brake	•	•	•
2-speed travel	•	•	•
Main filter	•	•	•
Hyd. pre-pressure operating joysticks	•	•	•

The standard and optional equipment can differ depending on the country in which the machine is delivered. Please contact your local dealer for more information.

SANY

FORGING THE FUTURE TOGETHER

SANY HEAVY MACHINERY (UK) LTD
Unit 6, M8 Interlink Estate,
Coatbridge, Glasgow, ML5 4RP
Tel: 0330 2021 318
Email: info@sanyuk.com

Sanyuk.com

Not all products are available in all markets.
As part of our continuous improvement process, we reserve the right to modify specifications and designs without giving prior notice. Machines shown may feature additional options other than the standard machine specification.

HEX - SY26U/SY26C - 07.2026 - EU - V2