SANY

SY215LC / SY235LC

TRACKED EXCAVATORS

Max. Gross Power
129 kW / 2,000 rpm (SY215LC)
129 kW / 2,200 rpm (SY235LC)

Operating Weight
22,200 kg (SY215LC)
23,700 kg (SY235LC)

Max. Dig Depth
6,295 mm (SY215LC)
6,450 mm (SY235LC)

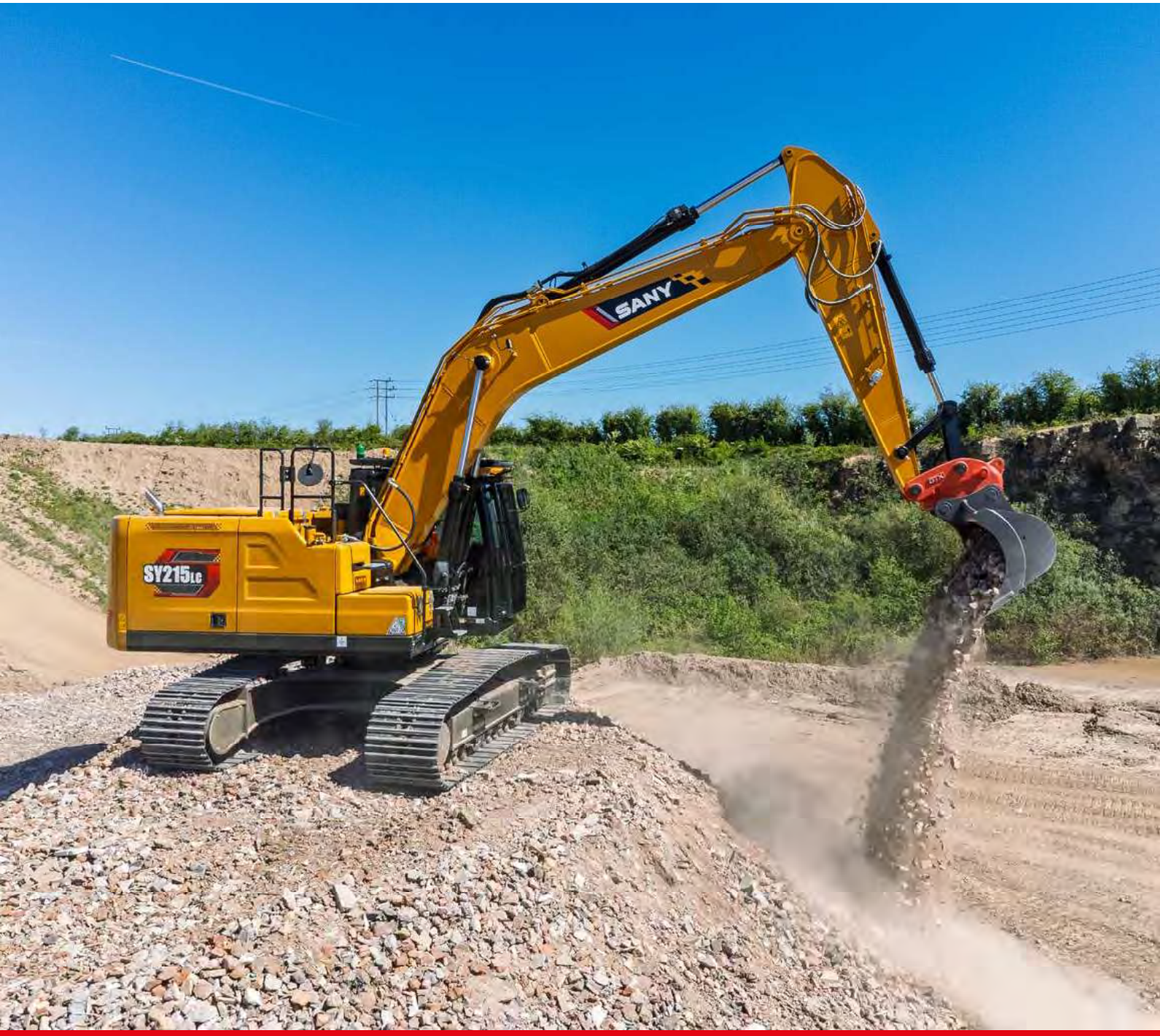

SANY:

FORGING THE FUTURE TOGETHER

Founded in 1989, SANY has grown into one of the world's largest construction equipment manufacturers, with global R&D and production – including European facilities – and machines working in 150+ countries. Our range spans excavators, road and port machinery, and cranes, built with proven manufacturing heritage and modern quality systems.

A GLOBAL LEADER BEHIND EVERY RANGE

From micro excavators to high-tonnage earthmovers, cranes, telehandlers, concrete machinery, road equipment and more, SANY's worldwide product range reflects decades of innovation, investment, and real-world experience.

This broad international range is proven on job sites in over 150 countries, ensuring every machine delivered to Europe is backed by extensive testing, real-world performance and the strength of a global supply chain.

ENGINEERED FOR OUR EUROPEAN CUSTOMERS

Every SANY machine destined for Europe is engineered to meet European regulations and real-world use cases – from CE and Stage V compliance to region-specific specifications and options.

For European construction customers, this worldwide capability translates directly into trust. SANY selects and engineers its product line specifically for local requirements, combining global innovation with European-quality standards, dealer support and service.

GLOBAL MANUFACTURING EXCELLENCE

SANY's long-standing commitment to quality and innovation – supported by advanced intelligent manufacturing and a sustained 5-7% of annual revenue reinvested into R&D – results in machines that deliver reliability, efficiency, and consistent performance on site.

With state-of-the-art production facilities and rigorous global testing standards, every machine is built to withstand demanding conditions and deliver long-term value.













INTRODUCING THE

SY215LC / SY235LC

Built to perform in demanding construction, earthmoving and rental applications, the SANY SY215LC and SY235LC combine powerful digging performance, advanced technology and proven reliability.

Both machines are powered by a Stage V Cummins engine, delivering 129kW at 2,000rpm on the SY215LC and 129kW at 2,200rpm on the SY235LC, providing the power, efficiency and responsiveness needed to maximise productivity while minimising operating costs.



WHY CHOOSE SANY EXCAVATORS

WORLD RENOWNED COMPONENTS

SANY uses proven, top-tier components to deliver long-lasting reliability meaning you benefit from fewer breakdowns, longer service life, and lower ownership costs.

GREAT VALUE, UNCOMPROMISED QUALITY

You can have confidence in your return on investment. SANY excavators are loaded with the latest innovation to help reduce costs, increase productivity and protect resale value.

INDUSTRY LEADING 5 YEAR WARRANTY

Built to last and backed by an industry-leading 5-year warranty, giving you lower risk, predictable costs, and confidence on every job.

LOW OPERATING COSTS

Simple engineering, readily available parts, and low fuel consumption reduce ongoing running costs, a major advantage in Europe's high-cost markets.

LOCAL SUPPORT

Europe-wide expert dealers and value-added aftermarket support keep your machine running, minimise downtime, and simplify ownership.

STANDARD ADVANCED FEATURES

SANY excavators include game-changing features as standard, no costly add-ons or custom modifications required.

SY215LC / SY235LC

PRODUCTIVITY

Built for demanding excavation applications, the SY215LC (4 cylinder engine) and SY235LC (6 cylinder engine) combine powerful performance, exceptional stability and outstanding versatility. High-output Stage V Cummins engines, a robust machine structure and productivity-focused hydraulics work together to deliver fast cycle times, confident operation and the flexibility to tackle a wide range of attachments and applications.



POWERFUL, PRECISE PERFORMANCE

The SY215LC and SY235LC are powered by Stage V Cummins engines delivering 129kW of proven performance for demanding excavation applications. Optimised for fast response and high productivity, they provide the power, torque and hydraulic performance needed to maintain strong digging forces, rapid cycle times and consistent output under heavy workloads.

The heavy-duty undercarriage and robust boom design deliver exceptional stability, providing a solid platform for confident lifting, precise operation and productive performance in demanding applications.

VERSATILE OPERATION

Equipped with standard hammer and bi-directional pipework, the SY215LC and SY235LC are ready to run a wide range of attachments for maximum on-site versatility.

HYDRAULICS DESIGNED FOR PRODUCTIVITY

SANY's twin auxiliary hydraulics as standard allow you to operate a wider range of attachments with powered movement in both directions, giving you reversible control and faster task changes.

The hydraulic quick hitch system, operated through the touchscreen display, enables fast and convenient attachment changes, reducing downtime and increasing productivity across a wide range of applications.



SY215LC / SY235LC

EFFICIENCY

Designed to maximise productivity while minimising operating costs, the SY215LC and SY235LC combine fuel-efficient engine technology with intelligent hydraulic management. From reduced fuel consumption and extended refuelling intervals to energy-efficient hydraulics and optimised travel performance, every element is engineered to deliver more productive hours from every litre of fuel.

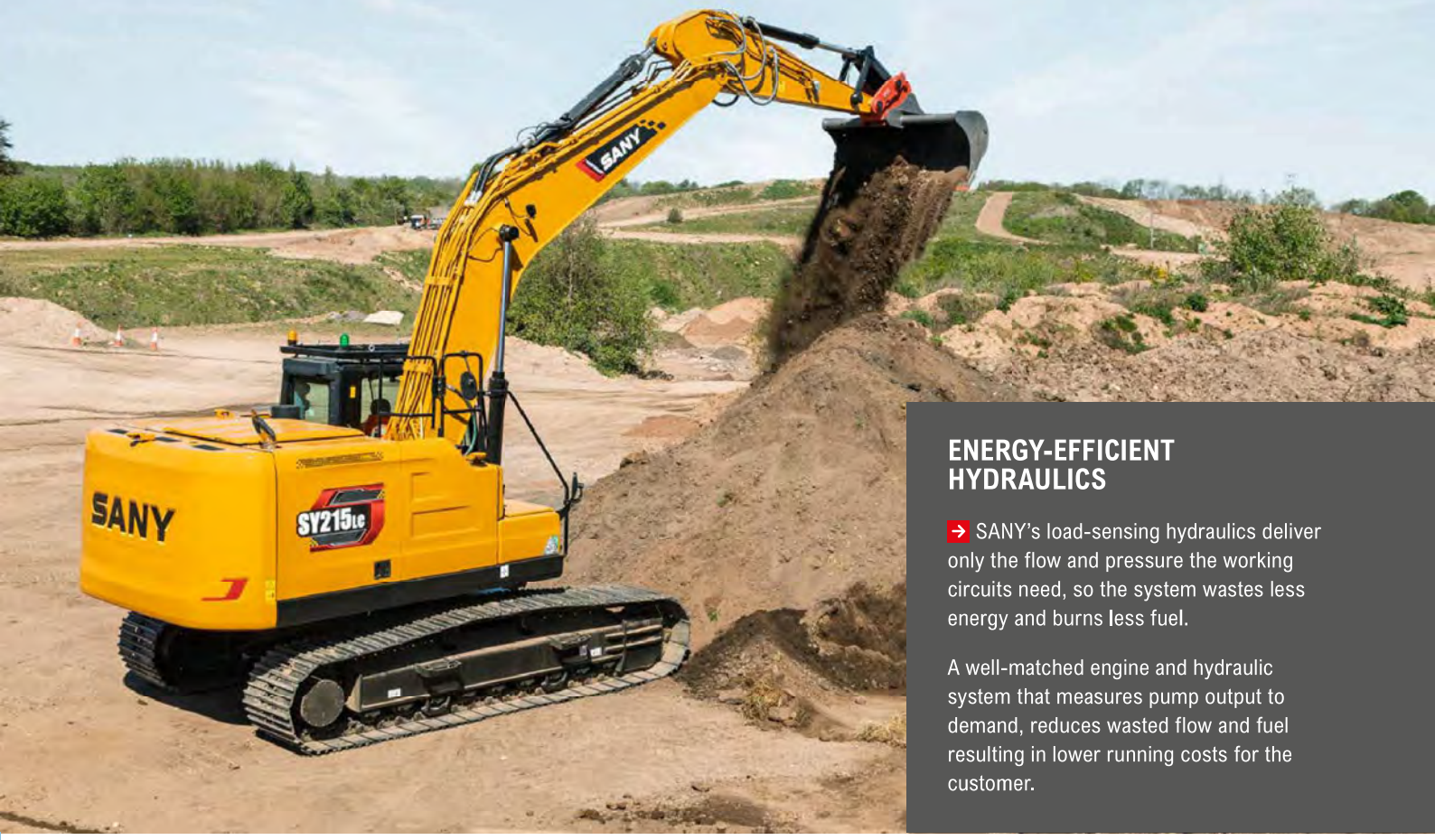

ENERGY-EFFICIENT HYDRAULICS

SANY's load-sensing hydraulics deliver only the flow and pressure the working circuits need, so the system wastes less energy and burns less fuel.

A well-matched engine and hydraulic system that measures pump output to demand, reduces wasted flow and fuel resulting in lower running costs for the customer.

EFFICIENT OPERATION

SANY's two-speed tracking lets the operator choose high or low travel to match terrain and task reducing unnecessary revs and therefore fuel usage.



CONSUMING LESS, STORING MORE

The SY215LC and SY235LC feature Stage V Cummins engines delivering 129kW of efficient power, helping to reduce fuel consumption without compromising performance. Optimised engine performance and intelligent power management ensure fuel is used effectively throughout the working day, lowering operating costs and maximising productivity from every litre.

A 370-litre fuel tank and efficient consumption allow for extended refuelling intervals, cutting downtime and fuel runs so the machine stays productive longer between stops.



SY215LC / SY235LC

OPERATOR ENVIRONMENT

Designed around the operator, the SY215LC and SY235LC combine premium comfort, excellent visibility and intuitive controls to create a productive working environment. From long hours in the cab to demanding applications on site, every detail is engineered to reduce fatigue, enhance awareness and help operators perform at their best throughout the working day.

EVERYDAY EASE

Clear instrumentation and a large 10-inch high-resolution colour display provide easy access to key machine information, helping operators work more efficiently and with greater confidence.

Standard dual proportional joysticks ensure precise, intuitive control, helping operators work faster, safer and more efficiently with any attachment.

The SY215LC and SY235LC are equipped with a Bluetooth radio, USB connectivity, an integrated heated/cooled storage box and generous in-cab storage, providing the convenience and practicality operators need to stay comfortable and productive throughout the day.



PREMIUM COMFORT

Featuring an all-new cab design, the SY215LC and SY235LC deliver a premium operator environment designed to maximise comfort and productivity

The redesigned ergonomic cab features a heated air-suspension seat and adjustable armrests, providing exceptional comfort and support to help reduce fatigue, improve concentration and maximise productivity throughout the working day.

A heater and automatic climate control system, conveniently managed through the touchscreen display, maintain a comfortable cab environment in all weather conditions, helping operators remain productive.



The quiet, low-vibration engine reduces noise and vibration levels to a minimum, creating a more comfortable operating environment and allowing the machine to work effectively in noise-sensitive areas.

JOB SITE AWARENESS

An improved air duct layout delivers more effective heating, cooling and demisting performance, helping maintain operator comfort and visibility in all weather conditions.

The large windows and sophisticated cab design of our excavators ensure that the operator has the best possible view of the area surrounding the machine.



SY215LC / SY235LC

SAFETY & SECURITY

From reinforced structural components to advanced stability and security systems, every aspect is designed to protect both operator and machine in demanding environments. Clear sightlines, strengthened structure, and well-positioned safety aids further enhance operator awareness, reducing risk and supporting confident decision-making on busy worksites.

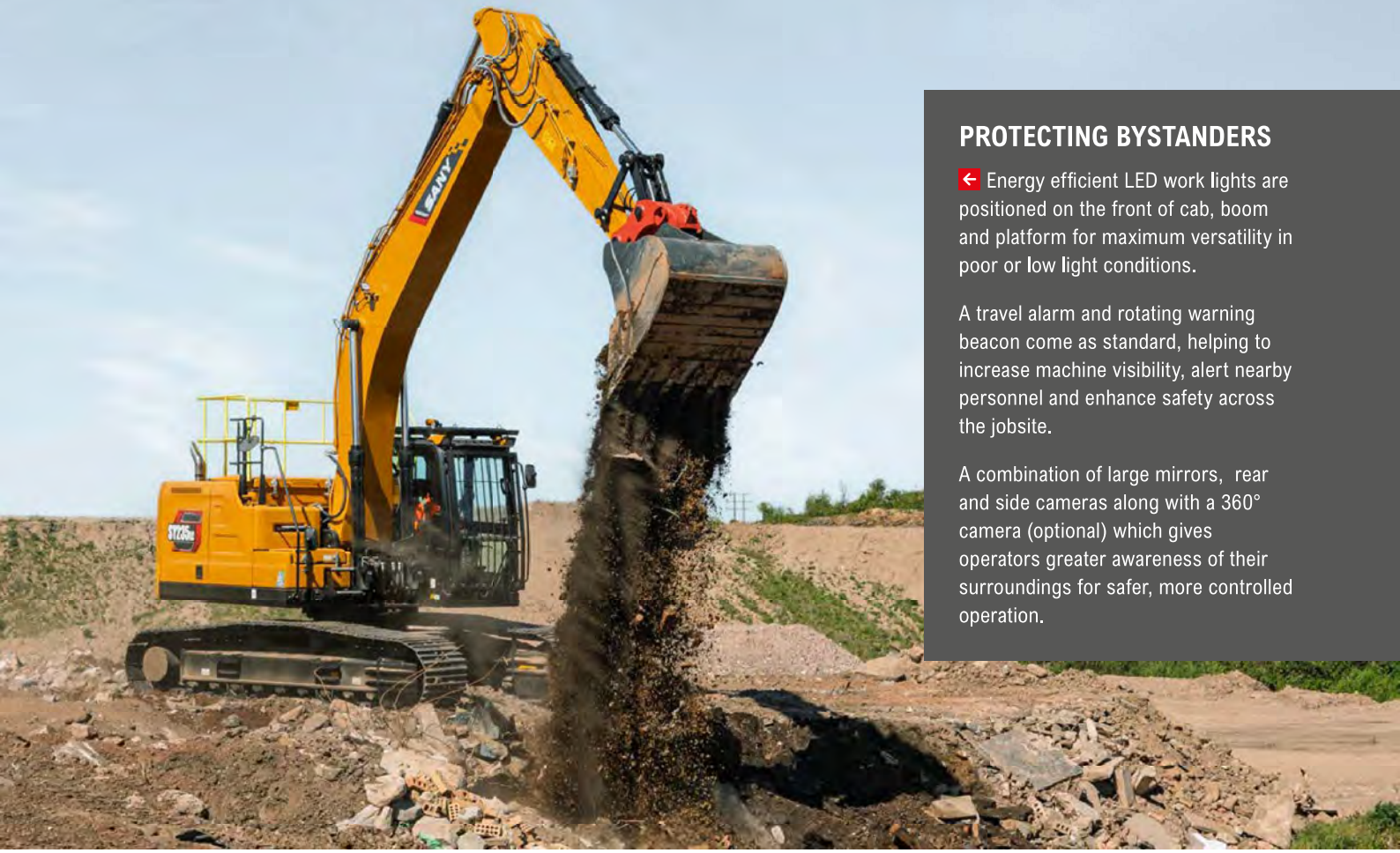

PROTECTING BYSTANDERS

Energy efficient LED work lights are positioned on the front of cab, boom and platform for maximum versatility in poor or low light conditions.

A travel alarm and rotating warning beacon come as standard, helping to increase machine visibility, alert nearby personnel and enhance safety across the jobsite.

A combination of large mirrors, rear and side cameras along with a 360° camera (optional) which gives operators greater awareness of their surroundings for safer, more controlled operation.

STRUCTURAL INTEGRITY

The SY215LC and SY235LC are equipped with a ROPS and FOPS-certified cab, providing a high level of protection and peace of mind when working in demanding environments.

Heavy-duty steel bodywork provides robust protection against on-site damage, safeguarding vital structures and contributing to reduced lifetime ownership costs.

Level II cab guards with openable hinges provide enhanced operator protection while allowing easy cleaning and maintenance. Ergonomically positioned handrails also ensure safe and secure access to the upper structure, helping to reduce risk during routine inspections and servicing.

EMERGENCY SHUTDOWN

Featuring both a battery disconnect switch and an emergency stop button, the system allows immediate power isolation to enhance operator and site safety.

ADVANCED SECURITY

Lockable service doors protect critical components and fuel systems, preventing unauthorised access and enhancing site security.

A keyless push-button start system with password protection enhances machine security while providing fast, convenient access for authorised operators.

Backed by the CESAR Datatag Scheme for proven theft deterrence and equipped with CESAR ECV, these machines allow swift and dependable verification of emissions category.

Advanced anti-theft telematics combines GPS tracking, geofencing and remote immobilisation to help protect the machine from theft, prevent unauthorised use and provide greater fleet security.

e.vision

SY215LC / SY235LC

SERVICE & MAINTENANCE

Designed for optimal uptime, SANY excavators feature wide service doors, clearly accessible service poins, and extended service intervals to simplify maintenance and maximise machine availability. Premium, high-quality components consistent throughout the range further enhance durability and reliability, ensuring reliable performance shift after shift.

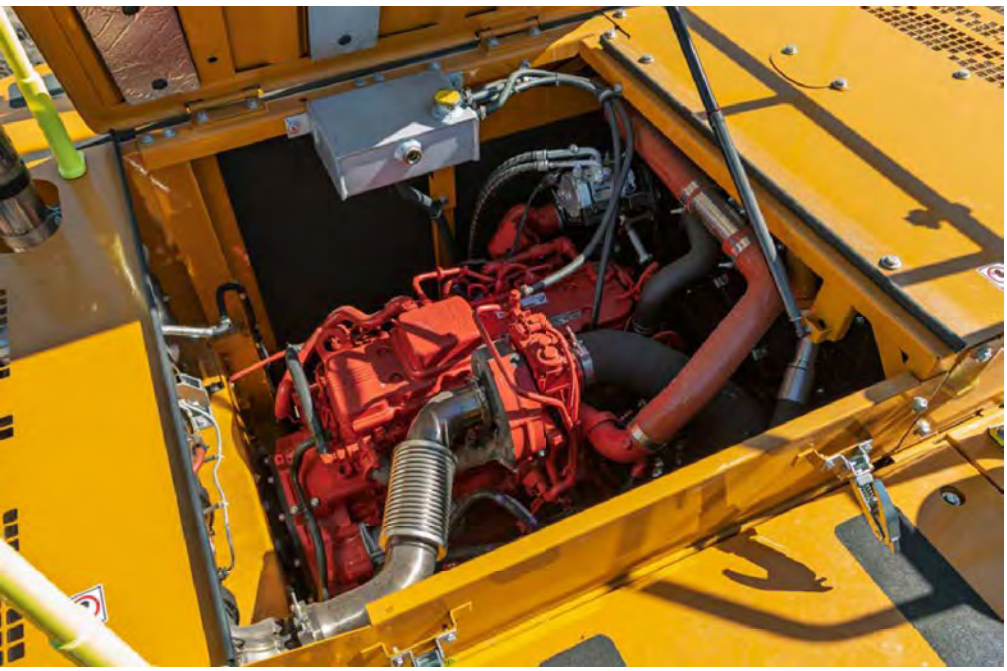

MAINTENANCE MADE EASY

SANY excavators are engineered for streamlined service and maintenance, with design features that make routine upkeep faster and more efficient.

Wide opening doors provide easy access to all key service points, ensuring that daily checks are quick, simple, and easy to perform whilst ergonomic handrails enable safe access to the maintenance platform.

COMMON, PREMIUM COMPONENTS

Produced in advanced manufacturing facilities in China, SANY excavators are built for high quality and lasting durability, utilising high-spec components from reputable global manufacturers.

Shared componentry across the range, combined with an extensive European dealer network, ensures rapid response and efficient turnaround for any machine repair.



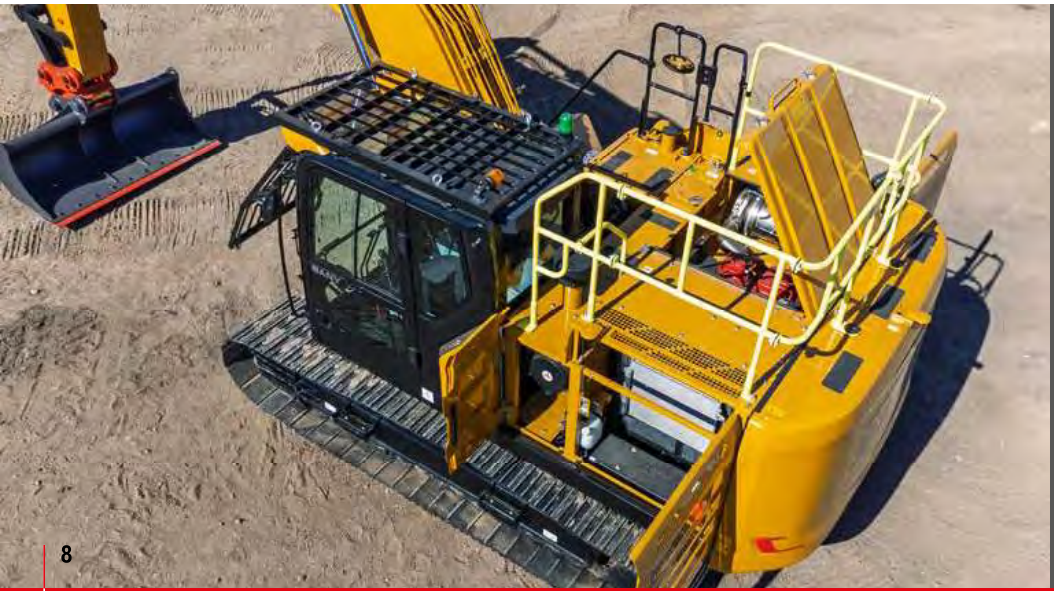

INCREASED WORKING HOURS

With extended 500-hour service intervals, maintenance frequency is reduced, lowering operating costs and improving machine availability.

Real-time health alerts, remote diagnostics, and scheduled maintenance via SANY EVI telematics work together to enhance reliability and extend machine life.

SY215LC / SY235LC

ATTACHMENTS

SANY machines offer extended capability through a broad selection of easily interchangeable attachments. This range enables efficient performance across varied tasks such as digging, drilling, land clearing, material handling, and demolition.

BUCKETS

SANY provides a complete range of excavator buckets designed to enhance your machine's efficiency. From general-purpose digging buckets to more specialised options, they enable you to tackle a wide variety of job sites.



QUICK HITCH

SANY quick hitches enable rapid attachment changes, helping you get more done in less time. By reducing manual labour and ensuring a secure fit, they expand the machine's versatility and keep your operations running smoothly.

BREAKERS

SANY breakers have been designed to deliver powerful breaking performance, long-lasting durability, and high efficiency. They are suitable for a wide range of applications such as quarry, tunneling, civil construction, trenching, road & landscaping.

GRABS

SANY excavator grabs deliver powerful, reliable material handling with high clamping force, smooth hydraulic control and durable steel construction. The result is a cost-effective, high-performance attachment that boosts productivity and control on every job.*

*SANY attachment options may vary depending on country.

SY215LC / SY235LC

YOUR UPTIME. OUR PRIORITY.

Rely on SANY's value-added aftermarket services to keep your equipment operating at peak efficiency. From proactive maintenance to reducing unexpected downtime and controlling operating costs, we provide the support your business depends on. Our European service solutions further boost performance, streamline maintenance tasks, and improve profitability across your fleet.

5 YEAR WARRANTY

Built on a global reputation for reliability and durability, SANY excavators come with an unmatched 5-year warranty* – one of the strongest in the industry.

It's a clear statement of the confidence we have in our machines and our commitment to your uptime. Your investment is protected from day one, giving you the assurance that if an issue arises, you're fully covered.

*Terms and conditions apply.

SERVICE AND SUPPORT

SANY's extensive network of certified technicians and dealer partners provides on-site service and technical expertise designed to minimise downtime and maintain peak machine performance.

Working in coordination with our advanced manufacturing facilities in China, our European teams combine global engineering capability with practical local support.

SANY GENUINE PARTS

SANY genuine parts are engineered, rigorously tested, and manufactured to the exact specifications required by your machine. Their precise fit and compatibility guarantee maximum performance and system integrity.

By maintaining correct operational tolerances, they enhance on-site safety and significantly reduce the risk of unplanned failures or downtime. All genuine parts are supported by a 12-month warranty for added assurance.







SY215LC / SY235LC

INTELLIGENT SUPPORT

SANY's connected tools give you clarity, confidence, and control on every project. ROOTPILOT brings precision to the bucket; EVI Telematics brings visibility to the fleet. Together, they reduce downtime, cut costs, and boost productivity. Smart technology – driving your success.



EVI e.vision

Designed exclusively for Europe, our digital fleet management system EVI gives you complete visibility of your machines whenever and wherever you need it. By simplifying fleet oversight, it enables better decision-making, lowers costs, and improves uptime across your operations. With built-in safety and security features that let you monitor location and usage in real time, you gain greater control and peace of mind.

Key benefits include:

- Enhanced fleet visibility and remote machine management
- Set authorised operating hours and create geofenced security zones to reduce theft risk and misuse
- Greater visibility of routine checks and machine health
- Multi-channel, real-time communication for faster decision-making
- Operating report analysis for smarter, data-led decision-making
- Customer account management for personalised, data-backed communication

SANY ROOTPILOT

SANY ROOTPILOT is a high-precision 3D machine-control system that uses GNSS, IMU sensors, and smart algorithms to guide excavators in real time. It gives operators clear, intuitive 3D feedback for faster, safer, and more accurate digging.

ROOTPILOT installs quickly, works with multiple machines and attachments, and syncs designs through the cloud so every operator works from the same plan. It's ideal for highways, municipal works, and foundation projects where precision is critical.

Available in Fundamental and Premium versions, ROOTPILOT supports everything from basic grading to full 3D model guidance, offsets, layer control, and complex digital designs.

Main customer benefits:

- ±3 cm accuracy for first-time-right excavation
- Avoidance of underground utilities and hazards
- Lower fuel, labour, and rework costs
- Faster production with fewer survey checks
- Works with 2D or full 3D design models
- Boosts operator confidence and consistency

SY215LC / SY215NLC / SY235LC

SPECIFICATION

ENGINE

	SY215LC	SY215NLC	SY235LC
Model	Cummins QSB 4.5L	Cummins QSB6.7	Cummins QSB 6.7L
Type	Water-cooled, 4-cylinder, common rail with AdBlue	Water-cooled, 6-cylinder, common rail with AdBlue	Water-cooled, 6-cylinder, common rail with AdBlue
Exhaust emissions	Stage V	Stage V	Stage V
Rated power	129 k @2,000 rpm	129kW @2200 rpm	129kW @2,200 rpm
Max. torque	780Nm @1,500 rpm	881 Nm @ 1300 rpm	1,120 Nm @1,100 rpm
Displacement	4,500 cc	6700 cc	6,700 cc

HYDRAULIC SYSTEM

	SY215LC	SY215NLC	SY235LC
Main pump	2 × variable piston pumps with electronic control	2 × variable piston pumps with electronic control	2 × variable piston pumps with electronic control
Max. oil flow	456 l/min (2 × 228 l/min)	482 l/min (2 x 241 l/min)	456 l /min (2 × 228 l/min)
Travel motor	Variable displacement axial piston motor	Variable displacement axial piston motor	Variable displacement axial piston motor
Swing motor	Axial piston motor	Axial piston motor	Axial piston motor
Max. oil flow (AUX 1)	400 l/min	400 l/min	400 l/min
Max. oil flow (AUX 2)	40 l/min	35 l/min	35 l/min

PERFORMANCE

	SY215LC	SY215NLC	SY235LC
Swing speed	9 rpm	11.5 rpm	11.1 rpm
Max. travel speed	5.4 km/h	5.4km/h	5.4 km/h
Max. travel force	224.1 kN	191 Kn	222 kN
Gradeability	70%/35°	70%/35°	70%/35°
Bucket capacity	1.1 m^3	1.2 m3	1.2 m^3 / 1.25 m^3 / 1.35 m^3
Ground pressure	34.5 Kpa (800 mm track shoes)	58 kPa	49.2 Kpa (600 mm track shoes)
Bucket digging force (ISO)	149 kN	143 kN	150 kN
Arm digging force (ISO)	107 kN	115 Kn	117 kN

SERVICE REFILL CAPACITIES

	SY215LC	SY215NLC	SY235LC
Fuel tank	370 L	300 L	370 L
Engine coolant	27 L	27.6 L	27.6 L
Engine oil	12 L	17 L	27 L
Drive (per side)	8.5 L	4L	4.4 L
Hydraulic system	270 L	201 L	280 L

Based on theoretical calculation at max flow with no load.

Subject to alterations.

In the interest of continual equipment development, SANY reserves the right to change these specifications at any time without prior notification.

OPERATING WEIGHT

	SY215LC	SY215NLC	SY235LC
Cab	22,200 kg	23,500 kg	23,700 kg

Note: Includes 75kg (165 lb) operator, full fuel tank and excludes any attachments or hitch

UNDER & UPPER STRUCTURE

	SY215LC	SY215NLC	SY235LC
Boom length	5,700 mm	5,681 mm	5,700 mm
Arm length	2,900 mm	2,925 mm	2,900 mm
Bottom rollers	9	9	9
Top rollers	2	2	2
Rotation device	Planetary gear reducer driven by an axial piston motor, automatic hydraulic released slewing brake	Planetary gear reducer driven by an axial piston motor, automatic hydraulic released slewing brake	Planetary gear reducer driven by an axial piston motor, automatic hydraulic released slewing brake

RELIEF VALVE SETTINGS

	SY215LC	SY215NLC	SY235LC
Implement circuit	34.3 MPa	34.3 MPa	34.3 MPa
Power boost	37.3 MPa	34.3 MPa	37.3 MPa
Swing circuit	27.5 MPa	27.5 MPa	27.5 MPa
Travel circuit	34.3 MPa	34.3 MPa	34.3 MPa
Pilot pressure	3.9 MPa	3.9 MPa	3.9 MPa

SOUND LEVEL

	SY215LC	SY215NLC	SY235LC
Noise level inside cabin	68 dB(A)	72 dB(A)	68 dB(A)
Noise guaranteed value	99 dB(A)	102 dB(A)	101 dB(A)

The SY215NLC is not available in all European markets. Product availability varies by country and is subject to local regulations and distributor offerings.

SY215LC / SY215NLC / SY235LC

SPECIFICATION

SY215LC LIFTING CAPACITIES

Load Point Height (B)	Radius (A) 1.5 m		3.0 m		4.5 m		6.0 m		7.5m		Digging Reach Max	
7.5 m kg							*4267	*4267			*4746	*4746
6.0 m kg							*4617	*4617			4816	4350
4.5 m kg					*5771	*5771	*5159	*5159	*4936	4107	*4959	3754
3.0 m kg					*7583	*7583	*6008	5480	*5310	4004	*5155	3357
1.5 m kg					*9288	7705	*6893	5240	*5763	3887	5036	3354
Ground line kg			*6861	*6861	*10286	7429	*7554	5069	5767	3799	5161	3419
–1.5 m kg	*7109	*7109	*10994	*10994	*10532	7346	7790	4994	5737	3771	4833	3694
–3.0 m kg	*11341	*11341	*14385	13964	*10058	7401	*7504	5023			*6472	4345
–4.5 m kg			*11956	*11956	*8474	7615					*6930	6066

SY215NLC LIFTING CAPACITIES

Load Point Height (B)	Radius (A) 1.5 m		3.0 m		4.5 m		6.0 m		7.5m		Digging Reach Max	
7.5 m kg							*4232	*4232			*3449	*3449
6.0 m kg							*4677	*4677			*3113	*3113
4.5 m kg							*5142	4630	*4782	3210	*2985	2871
3.0 m kg					*7489	6561	*5870	4331	*5091	3085	*2989	2588
1.5 m kg					*8954	5940	*6613	4032	5093	2938	*3112	2472
Ground line kg			*7388	*7389	*9726	5597	6817	3819	4972	2826	*3409	2503
–1.5 m kg	*7679	*7679	*11636	10140	*9745	5481	6705	3719	4931	2789	*3967	2703
–3.0 m kg	*12174	*12174	*12677	10352	*9026	5546	*6691	3756			*5161	3203
–4.5 m kg			*9843	*9843	*7102	5789					*5483	4500

SY235LC LIFTING CAPACITIES

Load Point Height (B)	Radius (A) 1.5 m		3.0 m		4.5 m		6.0 m		7.5m		Digging Reach Max	
7.5 m kg							*4848	*4848			*4395	*4395
6.0 m kg							*5017	*5017			*4270	3898
4.5 m kg							*5501	*5501	*5152	*5152	*4175	3244
3.0 m kg					*7946	*7946	*6269	*6269	*5473	4528	*4005	2890
1.5 m kg					*9492	*9492	*7056	6015	5005	4409	*4058	2744
Ground line kg			*7639	*7639	*10320	8794	*7602	5838	4912	4320	*4553	2774
–1.5 m kg	*7863	*7863	*12435	*12435	*10372	8710	6643	5764	4888	4297	5101	2998
–3.0 m kg	*12872	*12872	*13541	*13541	*9657	*9657	*7212	5805			6135	3578
–4.5 m kg			*10674	*10674	*7736	*7736					*6742	4970

1. This capability is calculated according to GB/T 13331, ISO10567 standards.The limiting coefficient of the hydraulic system is 0.87, and the tipping coefficient is 0.75.
2. Marked with * is limited by hydraulic pressure, marked without * is limited by stability.
3. The lifting point is the support hole in front of the bucket rod (excluding the weight of the bucket). If there are additional accessories such as buckets, they should be deducted from the above lifting weight.
4. A- Radius of loading point (m), B- Loading point height (m).

SY215LC / SY215NLC / SY235LC

SPECIFICATION

DIMENSIONS (TRANSPORT)

		SY215LC	SY215NLC	SY235LC
A	Transport length	9,680 mm	9,635 mm	9,635 mm
B	Transport width (600mm track shoes)	3,180 mm	2,540 mm	2,980 mm
C	Height over cabin / ROPS	3,145 mm	3,315 mm	3,170 mm
D	Upper structure width	2,737 mm	2,753 mm	2,862 mm
E	Track height	950 mm	950 mm	950 mm
F	Track width	600/700/800 mm	500 mm	600/700/800 mm
G	Track gauge	2,380 mm	2,040 mm	2,380 mm
H	Min. ground clearance	468 mm	468 mm	468 mm
I	Tail swing radius	2,915 mm	2,950 mm	2,915 mm
J	Track ground length	3,640 mm	3,640 mm	3,640 mm
K	Track length	4,445 mm	4,445 mm	4,445 mm
L	Height of boom – transport	3,288 mm	3,315 mm	3,288 mm
M	Counterweight clearance	1,060 mm	1,060 mm	1,060 mm
	Cab width	1,005 mm	1,005 mm	1,005 mm
	Engine cover height	2,950 mm	2,950 mm	2,950 mm

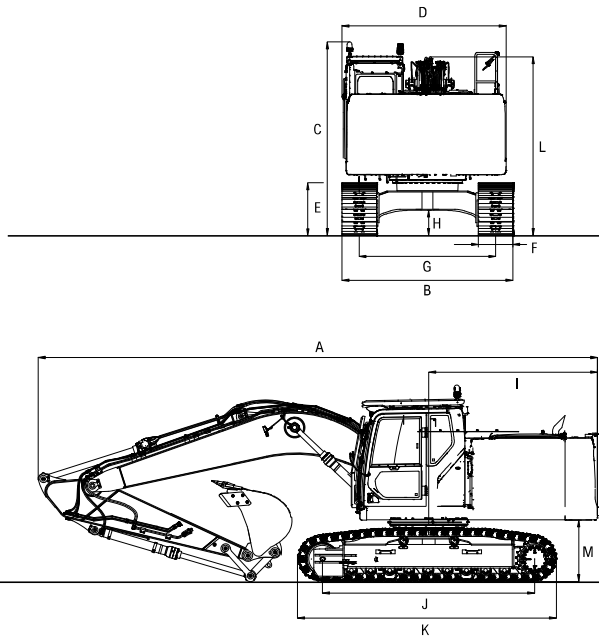

WORKING AREA

		SY215LC	SY215NLC	SY235LC
A	Max. digging height	9,610 mm	9,470 mm	9,740 mm
B	Max. dumping height	6,540 mm	6,735 mm	6,735 mm
C	Max. digging depth	6,295 mm	6,450 mm	6,450 mm
D	Max. vertical digging depth	6,160 mm	6,170 mm	6,170 mm
E	Max. digging reach	9,730 mm	9,745 mm	9,745 mm
F	Min. swing radius	3,730 mm	3,662 mm	3,662 mm
G	Maximum height at minimum swing radius	7,549 mm	7,600 mm	7,600 mm
	Min. dumping height	2,305 mm	2,305 mm	2,305 mm

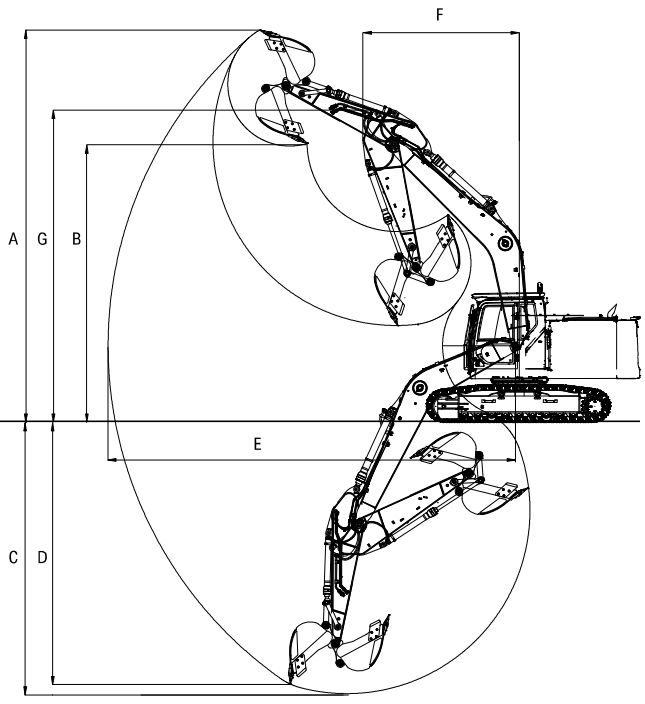

SY215LC / SY215NLC / SY235LC

STANDARD/OPTIONAL EQUIPMENT

OPERATORS COMFORT / CAB

	SY215LC	SY215NL	SY235LC
Heated/cooled air suspension seat	•	•	•
Automatic heater/air conditioning	•	•	•
Bluetooth radio and speaker	•	•	•
Adjustable armrests	•	•	•
USB and Type C charging points	•		•
Parallel wiper	•		•
Front sunblind	•		•
10” touchscreen display	•	•	•
Sky light/roof window	•	•	•
AUX 1 on joystick	•	•	•
AUX 2 on joystick	•	•	•
Integrated heated/cooling box	•	•	•
Cup holder	•	•	•

WORKING LIGHTS

	SY215LC	SY215NLC	SY235LC
Lights x 2 – front (LED)	•	•	•
Lights x 2 – boom (LED)	•	•	•
Lights x 1 – rear (LED)	•	•	•

UNDERCARRIAGE

	SY215LC	SY215NLC	SY235LC
Steel tracks (600/700/800mm)	OPT		OPT
Steel tracks 500mm		•	
Holes / loops for fixing	•	•	•

ENGINE

	SY215LC	SY215NLC	SY235LC
Auto idle	•	•	•
Fuel pump	•	•	•
Electric re-fueling pump	•	•	•

SAFETY & SECURITY

	SY215LC	SY215NLC	SY235LC
ROPS and FOPS cab	•	•	•
Level II OPS cab guards	•	•	•
Battery master switch	•	•	•
Travel alarm	•	•	•
Beacon lamp	•	•	•
Emergency stop button	•	•	•
Retractable seatbelt	•	•	•
Seatbelt alarm	OPT	OPT	OPT
Lockable bonnet	•	•	•
Lockable fuel cap	•	•	•
Hand rails	•	•	•
Side and rear camera	•	Rear only	•
360° camera	OPT	OPT	OPT
All-round mirrors	•	•	•
EVI telematics	•	•	•

WORKING EQUIPMENT

	SY215LC	SY215NLC	SY235LC
Boom and arm load holding valves with overload warning	•	•	•
Double acting circuit for hydraulic quick coupler with piping	•	•	•
Breaker & shear line proportional on joystick with piping	•	•	•
Rotation line proportional on joystick with piping	•	•	•
Oil flow rate adjustable for attachments	•	•	•
Arm - 2900 mm	•	•	•
Arm - 2925 mm		•	

HYDRAULIC SYSTEM

	SY215LC	SY215NLC	SY235LC
Swing brake	•	•	•
2 speed travel	•	•	•
Piping for additional hydraulic function AUX 1	•	•	•
Piping for additional hydraulic function AUX 2	•	•	•
Hydraulic pre-pressure operating joysticks	•	•	•
Main filter	•	•	•

The standard and optional equipment can differ depending on the country in which the machine is delivered. Please contact your local dealer for more information.

SANY

FORGING THE FUTURE TOGETHER

SANY HEAVY MACHINERY (UK) LTD
Unit 6, M8 Interlink Estate,
Coatbridge, Glasgow, ML5 4RP
Tel: 0330 2021 318
Email: info@sanyuk.com

Sanyuk.com

Not all products are available in all markets.
As part of our continuous improvement process, we reserve the right to modify specifications and designs without giving prior notice. Machines shown may feature additional options other than the standard machine specification.

HEX - SY215LC/SY235LC - 07.2026 - EU - V1