SANY

SY20C

MINI EXCAVATOR

Max. Gross Power	Operating Weight	Max. Dig Depth
14.6 kW / 2,400 rpm	1,975 kg	2,585 mm



SANY:

FORGING THE FUTURE TOGETHER

Founded in 1989, SANY has grown into one of the world's largest construction equipment manufacturers, with global R&D and production – including European facilities – and machines working in 150+ countries. Our range spans excavators, road and port machinery, and cranes, built with proven manufacturing heritage and modern quality systems.

A GLOBAL LEADER BEHIND EVERY RANGE

From compact excavators to high-tonnage earthmovers, cranes, telehandlers, concrete machinery, road equipment and more, SANY's worldwide product range reflects decades of innovation, investment, and real-world experience.

This broad international range is proven on job sites in over 150 countries, ensuring every machine delivered to Europe is backed by extensive testing, real-world performance and the strength of a global supply chain.

ENGINEERED FOR OUR EUROPEAN CUSTOMERS

Every SANY machine destined for Europe is engineered to meet European regulations and real-world use cases – from CE and Stage V compliance to region-specific specifications and options.

For European construction customers, this worldwide capability translates directly into trust. SANY selects and engineers its product line specifically for local requirements, combining global innovation with European-quality standards, dealer support and service.

GLOBAL MANUFACTURING EXCELLENCE

SANY's long-standing commitment to quality and innovation – supported by advanced intelligent manufacturing and a sustained 5-7% of annual revenue reinvested into R&D – results in machines that deliver reliability, efficiency, and consistent performance on site.

With state-of-the-art production facilities and rigorous global testing standards, every machine is built to withstand demanding conditions and deliver long-term value.












INTRODUCING THE

SY20C

Engineered for performance in tight and demanding environments, the SANY SY20C is ideal for utility works, landscapers and other trades working on restricted jobsites.

Delivering SANY'S renowend strength and reliability and equipped with a generous standard specification, it packages serious capablity into a compact, highly manoeuvrable machine.



WHY CHOOSE SANY MINI EXCAVATORS

WORLD RENOWNED COMPONENTS

SANY uses proven, top-tier components to deliver long-lasting reliability – meaning you benefit from fewer breakdowns, longer service life, and lower ownership costs.

GREAT VALUE, UNCOMPROMISED QUALITY

You can have confidence in your return on investment. SANY mini excavators are loaded with the latest innovations to help reduce costs, increase productivity and protect resale value.

INDUSTRY LEADING 5 YEAR WARRANTY

Built to last – and backed by an industry-leading warranty – giving you lower risk, predictable costs, and confidence on every job.

LOW OPERATING COSTS

Simple engineering, readily available parts, and low fuel consumption reduce ongoing running costs – a major advantage in Europe's high-cost markets.

LOCAL SUPPORT

Europe-wide expert dealers and value-added aftermarket support keep your machine running, minimise downtime, and simplify ownership.

STANDARD ADVANCED FEATURES

SANY excavators include all essential features as standard – no costly add-ons or custom tweaks required.

SY20C

PRODUCTIVITY

Built for versatility in tight or challenging spaces, the SY20C helps operators work faster, safer, and more efficiently. With smart swing-boom design, expandable undercarriage, and powerful twin auxiliary hydraulics, the SY20C simplifies setup, speeds up attachment changes, and maximises productivity on every job.



COMPACT DIMENSIONS

With compact dimensions you can access tight sites, work flush to walls or obstacles, and minimise repositioning for faster setup – all with low ground impact.

SANY's swing boom design lets you offset the boom so you can dig alongside walls and in tight spaces without rotating/ repositioning the machine, reducing ground disturbance.

Integrated tie-down points on the track frame and dozer blade simplify secure trailering – cutting loading time, improving load restraint compliance, and reducing risk of damage during transport.

HYDRAULICS DESIGNED FOR PRODUCTIVITY

SANY's twin auxiliary hydraulics as standard allow you to operate a wider range of attachments with powered movement in both directions, giving you reversible control and faster task changes.

SANY's hydraulic quick hitch enables in-cab attachment changes within seconds, eliminating manual pin removal, reducing exposure to pinch points, and minimising downtime between tasks.

VERSATILE OPERATION

The SY20C comes factory-equipped to make it plug-and-play with most common attachments – breakers, grapples, tilt buckets, augers.

With an expanding undercarriage (980–1350mm) and an adjustable dozer blade, the SY20C delivers greater stability and enhanced on-site versatility – helping operators work more confidently and efficiently in varying ground conditions.



SY20C

EFFICIENCY

Consuming less, storing more the SY20C is engineered for exceptional efficiency. Each machine combines an ultra-efficient YANMAR 3TNV80F engine with smart fuel management and advanced hydraulic technology to maximise productivity while minimising operating costs.

CONSUMING LESS, STORING MORE

Equipped with a fuel-saving YANMAR 3TNV80F engine, the SY20C delivers 14.6 kW of high-performance power at 2,400 rpm.

A 25-litre fuel tank and efficient consumption allow for extended refuelling intervals, cutting downtime and fuel runs so the machine stays productive longer between stops.

EFFICIENT OPERATION

SANY's two-speed tracking lets the operator choose high or low travel to match terrain and task reducing unnecessary revs and therefore fuel usage.

ENERGY-EFFICIENT HYDRAULICS

SANY's load-sensing hydraulics deliver only the flow and pressure the working circuits need, so the system wastes less energy and burns less fuel. A well-matched engine and hydraulic system that measures pump output to demand, reducing wasted flow and fuel resulting in lower running costs for the customer.



SY20C

OPERATOR ENVIRONMENT

To keep operators comfortable, focused, and productive throughout the day, the SY20C offers a thoughtfully designed operator environment. Ergonomic controls, supportive seating, and well-considered layouts work together to create a safe, comfortable workspace that enhances efficiency on every job.



PREMIUM COMFORT

The ergonomic operator's cab of the SY20C excavators features a high-back seat and adjustable armrests, designed to keep operators comfortable, focused, and productive

Air conditioning as standard ensures operators remain productive in warmer weather conditions.

Clear instrumentation and a high-resolution colour display make machine operation easier and more intuitive, helping operators work with confidence and precision.



EVERYDAY EASE

For added comfort and practicality, the SY20C mini excavator comes equipped with a radio, USB socket, cup holder, and a storage compartment, keeping essential items within easy reach.

The quiet, low-vibration engine reduces noise and vibration levels to a minimum, creating a more comfortable operating environment and allowing the machine to work effectively in noise-sensitive areas.

All-round mirrors provide clear visibility of the surrounding workspace, improving operator awareness and safety on site.

Joysticks with dual proportional control circuits enable safe and precise operation.



SY20C

SAFETY & SECURITY

From reinforced structural components to advanced stability and security systems, every aspect is designed to protect both operator and machine in demanding environments. Clear sightlines, strengthened structure, and well-positioned safety aids further enhance operator awareness, reducing risk and supporting confident decision-making on busy worksites.



PROTECTING BYSTANDERS

Energy efficient LED work lights are positioned on the front of cab and boom for maximum versatility in poor or low light conditions.

A travel alarm and rotating warning beacon help to increase visibility, attract attention and ensure safety on site.

STRUCTURAL INTEGRITY

ROPS and FOPS certification ensures the SY20C excavator meets stringent rollover and tip over protection standards.

Heavy-duty steel bodywork provides robust protection against on-site damage, safeguarding vital structures and contributing to reduced lifetime ownership costs.

EMERGENCY SHUTDOWN

Featuring both a battery disconnect switch and an emergency stop button, the system allows immediate power isolation to enhance operator and site safety.

ADVANCED SECURITY

Lockable service doors protect critical components and fuel systems, preventing unauthorised access and enhancing site security.

Backed by the CESAR Datatag Scheme for proven theft deterrence and equipped with CESAR ECV, these machines allow swift and dependable verification of emissions category.

Advanced anti-theft EVI telematics employ GPS tracking, and configurable geofencing to safeguard the machine from theft and unauthorised use.

SY20C

SERVICE & MAINTENANCE

Designed for optimal uptime, SANY excavators feature wide service doors, clearly accessible service points, and extended service intervals to simplify maintenance and maximise machine availability. Premium, high-quality components consistent throughout the range further enhance durability and reliability, ensuring reliable performance shift after shift.



MAINTENANCE MADE EASY

SANY mini excavators are engineered for streamlined service and maintenance, with design features that make routine upkeep faster and more efficient.

A wide-opening engine door provides ground-level access to all key service points, ensuring that daily checks are quick, simple, and easy to perform.

ROBUST STRUCTURES

Integrated guarding for the dozer blade and hydraulic cylinders provides robust protection against on-site impacts, minimising the risk of component damage, unplanned downtime, and expensive repair work.

Steel bodywork delivers long-lasting durability and protection against onsite damage, helping minimise repair costs and reduce overall cost of ownership.

COMMON, PREMIUM COMPONENTS

Produced in advanced manufacturing facilities in China, SANY excavators are built for high quality and lasting durability, utilising high-spec components from reputable global manufacturers.

Shared componentry across the range, combined with an extensive European dealer network, ensures rapid response and efficient turnaround for any machine repair.





INCREASED WORKING HOURS

With 500 hour service intervals, maintenance frequency is reduced, lowering operating costs and improving machine availability.

Real-time health alerts, remote diagnostics, and scheduled maintenance via SANY EVI telematics work together to enhance reliability and extend machine life.

SY20C

ATTACHMENTS

SANY machines offer extended capability through a broad selection of easily interchangeable attachments. This range enables efficient performance across varied tasks such as digging, drilling, land clearing, material handling, and demolition.

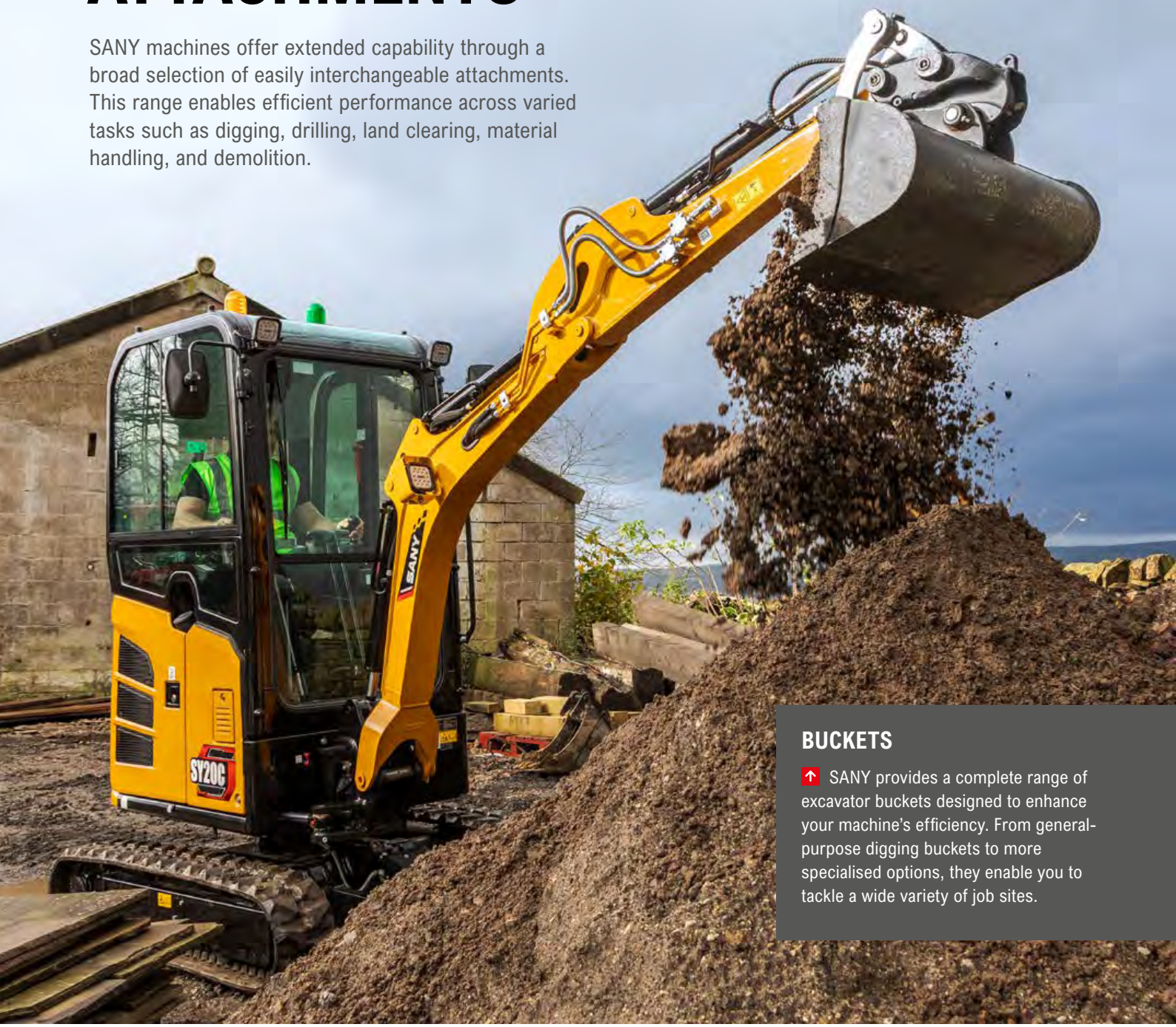

BUCKETS

SANY provides a complete range of excavator buckets designed to enhance your machine's efficiency. From general-purpose digging buckets to more specialised options, they enable you to tackle a wide variety of job sites.

QUICK HITCH

SANY quick hitches enable rapid attachment changes, helping you get more done in less time. By reducing manual labour and ensuring a secure fit, they expand the machine's versatility and keep your operations running smoothly.

BREAKERS

SANY breakers have been designed to deliver powerful breaking performance, long-lasting durability, and high efficiency. They are suitable for a wide range of applications such as quarry, tunneling, civil construction, trenching, road and landscaping.

GRABS

SANY excavator grabs deliver powerful, reliable material handling with high clamping force, smooth hydraulic control and durable steel construction. The result is a cost-effective, high-performance attachment that boosts productivity and control on every job.*

*SANY attachment options may vary depending on country.

SY20C

YOUR UPTIME. OUR PRIORITY.

Rely on SANY's value-added aftermarket services to keep your equipment operating at peak efficiency. From proactive maintenance to reducing unexpected downtime and controlling operating costs, we provide the support your business depends on. Our European service solutions further boost performance, streamline maintenance tasks, and improve profitability across your fleet.

5 YEAR WARRANTY

Built on a global reputation for reliability and durability, SANY excavators come with an unmatched 5-year warranty* – one of the strongest in the industry.

It's a clear statement of the confidence we have in our machines and our commitment to your uptime. Your investment is protected from day one, giving you the assurance that if an issue arises, you're fully covered.

*Terms and conditions apply.

SERVICE AND SUPPORT

SANY's extensive network of certified technicians and dealer partners provides on-site service and technical expertise designed to minimise downtime and maintain peak machine performance.

Working in coordination with our advanced manufacturing facilities in China, our European teams combine global engineering capability with practical local support.

SANY GENUINE PARTS

SANY genuine parts are engineered, rigorously tested, and manufactured to the exact specifications required by your machine. Their precise fit and compatibility guarantee maximum performance and system integrity.

By maintaining correct operational tolerances, they enhance on-site safety and significantly reduce the risk of unplanned failures or downtime. All genuine parts are supported by a 12-month warranty for added assurance.





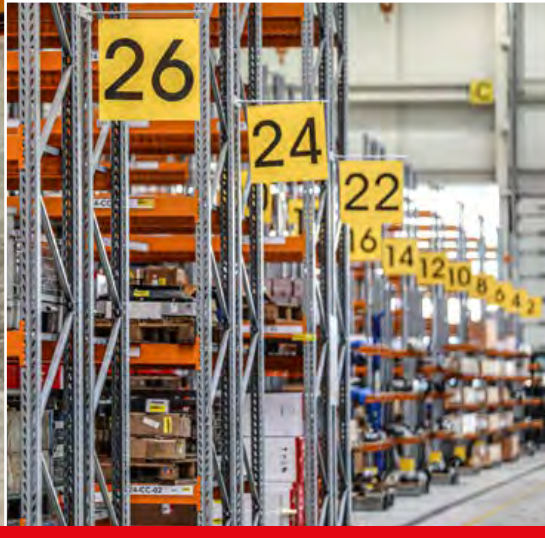

SY20C

INTELLIGENT SUPPORT

SANY's connected tools give you clarity, confidence, and control on every project. ROOTPILOT brings precision to the bucket; EVI Telematics brings visibility to the fleet. Together, they reduce downtime, cut costs, and boost productivity. Smart technology – driving your success.



EVI e.vision

Designed exclusively for Europe, our digital fleet management system EVI gives you complete visibility of your machines whenever and wherever you need it. By simplifying fleet oversight, it enables better decision-making, lowers costs, and improves uptime across your operations. With built-in safety and security features that let you monitor location and usage in real time, you gain greater control and peace of mind.

Key benefits include:

- Enhanced fleet visibility and remote machine management
- Set authorised operating hours and create geofenced security zones to reduce theft risk and misuse
- Greater visibility of routine checks and machine health
- Multi-channel, real-time communication for faster decision-making
- Operating report analysis for smarter, data-led decision-making
- Customer account management for personalised, data-backed communication

SANY ROOTPILOT

SANY ROOTPILOT is a high-precision 3D machine-control system that uses GNSS, IMU sensors, and smart algorithms to guide excavators in real time. It gives operators clear, intuitive 3D feedback for faster, safer, and more accurate digging.

ROOTPILOT installs quickly, works with multiple machines and attachments, and syncs designs through the cloud so every operator works from the same plan. It's ideal for highways, municipal works, and foundation projects where precision is critical.

Available in Fundamental and Premium versions, ROOTPILOT supports everything from basic grading to full 3D model guidance, offsets, layer control, and complex digital designs.

Main customer benefits:

- ±3 cm accuracy for first-time-right excavation
- Avoidance of underground utilities and hazards
- Lower fuel, labour, and rework costs
- Faster production with fewer survey checks
- Works with 2D or full 3D design models
- Boosts operator confidence and consistency

SY20C

SPECIFICATION

ENGINE

Model	YANMAR 3TNV80F
Type	In-line, water-cooled, four-stroke, naturally aspirated, diesel engine.
Exhaust emissions	Stage V
Rated power	14.6 kW / 2400 rpm
Max. torque	65.3 Nm / 1800 rpm
Displacement	1,267 cm^3
Batteries	1 × 12V / 60Ah

HYDRAULIC SYSTEM

Main pump	Variable displacement axial piston pump
Max. oil flow	66 L/min
Max. oil flow (AUX 1)	40 L/min
Max. oil flow (AUX 2)	40 L/min
Travel motor	Variable displacement axial piston motor
Rotation device	Axial piston motor with parking brake

PERFORMANCE

Swing speed	10 rpm
Max. travel speed	2.8 / 4.0 km/h (AC Off), 2.1 / 3.0 km/h (AC On)
Max. travel force	16.2 kN
Gradeability	58%/30°
Bucket capacity	0.04 m^3
Ground pressure	32 kPa
Bucket digging force (ISO)	16.6 kN
Arm digging force (ISO)	8.3/9.2 kN

SERVICE REFILL CAPACITIES

Fuel tank	25 L
Engine coolant	6.3 L
Engine oil	3.4 L
Drive (per side)	0.33 L
Hydraulic system	15 L

Based on theoretical calculation at max flow with no load.

Subject to alterations.

In the interest of continual equipment development, SANY reserves the right to change these specifications at any time without prior notification.

OPERATING WEIGHT

1,975 kg

Note: Includes 75kg (165 lb) operator, full fuel tank and excludes any attachments or hitch.

UNDER & UPPER STRUCTURE

Boom length	1770 mm
Arm length	960 / 1160 mm
Bottom rollers	3
Rotation device	Axial piston motor, planetary gear, single-row slewing ring, hydraulic parking brake
Undercarriage	Reinforced lower structure, welded drive frame.

RELIEF VALVE SETTINGS

Implement circuit	24.5 MPa
Swing circuit	16.2 MPa
Travel circuit	24 MPa
Pilot circuit	3.5 MPa

SOUND LEVEL

Noise level inside cabin	78 dB(A)
Noise guaranteed value	93 dB(A)

SY20C

SPECIFICATION

LIFTING CAPACITIES - DOZER BLADE DOWN (960mm ARM)

Load Point Height (B)		Radius (A) 2.0 m		2.5 m		3.0 m		Digging Reach Max	
3.0 m	kg								
2.0 m	kg			329*	329*	329*	326	322*	322*
1.0 m	kg	666*	576	502*	415	424*	318	322*	266
Ground line	kg	809*	538	577*	392	438*	305	365*	266
–1.0 m	kg	639*	538	460*	390			361*	333

LIFTING CAPACITIES - DOZER BLADE DOWN (1160mm ARM)

Load Point Height (B)		Radius (A) 2.0 m		2.5 m		3.0 m		Digging Reach Max	
3.0 m	kg							287*	287*
2.0 m	kg					326*	326*	222*	222*
1.0 m	kg	549*	549*	446*	415	394*	315	222*	222*
Ground line	kg	812*	533	571*	388	436*	300	257*	241
–1.0 m	kg	677*	527	487*	381	350*	298	333*	291

LIFTING CAPACITIES - DOZER BLADE UP (960mm ARM)

Load Point Height (B)		Radius (A) 2.0 m		2.5 m		3.0 m		Digging Reach Max	
3.0 m	kg								
2.0 m	kg			329*	329*	289	326	284	322*
1.0 m	kg	510	576	367	415	280	318	234	266
Ground line	kg	472	538	345	392	268	305	234	266
–1.0 m	kg	472	538	343	390			292	333

LIFTING CAPACITIES - DOZER BLADE UP (1160mm ARM)

Load Point Height (B)		Radius (A) 2.0 m		2.5 m		3.0 m		Digging Reach Max	
3.0 m	kg							287*	287*
2.0 m	kg					289	326*	222*	222*
1.0 m	kg	514	549*	366	415	278	315	211	222*
Ground line	kg	466	533	339	388	262	300	210	241*
–1.0 m	kg	460	527	333	381	260	298	254	291*

1. This capability is calculated according to GB/T 13331, ISO10567 standards. The limiting coefficient of the hydraulic system is 0.87, and the tipping coefficient is 0.75.
2. Marked with * is limited by hydraulic pressure, marked without * is limited by stability.
3. The lifting point is the support hole in front of the bucket rod (excluding the weight of the bucket). If there are additional accessories such as buckets, they should be deducted from the above lifting weight.
4. A- Radius of loading point (m), B- Loading point height (m).

SY20C

SPECIFICATION

DIMENSIONS (TRANSPORT)

A	Transport length	3695 mm
B	Transport width	980–1350 mm
C	Height over cabin/ROPS	2430 mm
D	Upper structure carriage width	1040 mm
E	Blade height	265 mm
F	Track width	230 mm
G	Track gauge	750–1120 mm
H	Min. ground clearance	150 mm
I	Tail swing radius	905 mm
J	Track length on ground	1220 mm
K	Track length	1585 mm
L	Track height	375 mm
M	Height of boom – transport	1125 mm
N	Cab length	1120 mm
O	Counterweight clearance	455 mm
P	Horizontal distance to blade	1200 mm
Q	Engine cover height	1345 mm
	Undercarriage width (blade)	1040 mm

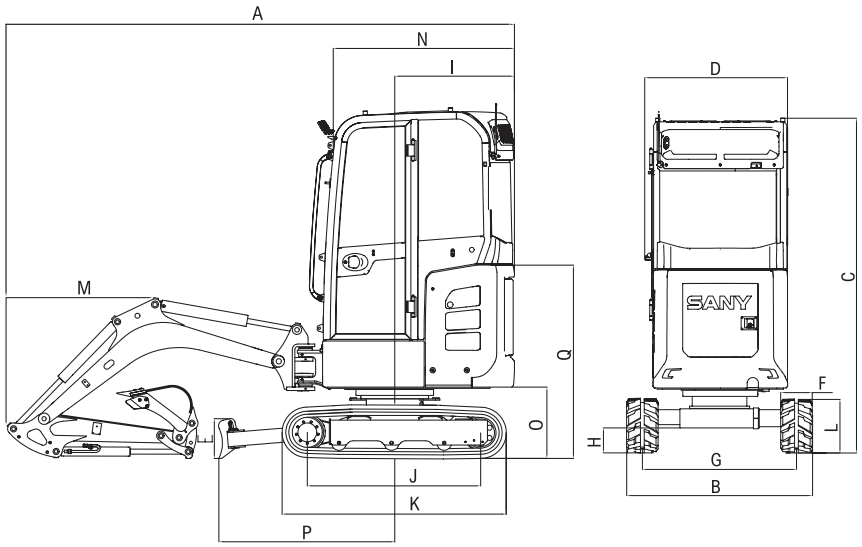

WORKING AREA

		960mm Arm	1160mm Arm
A	Max. digging height	3410 mm	3530 mm
B	Max. dumping height	2350 mm	2475 mm
	Min. dumping height	785 mm	585 mm
C	Max. digging depth	2385 mm	2585 mm
D	Max. vertical digging depth	2100 mm	2205 mm
E	Max. digging reach	3955 mm	4080 mm
F	Min. swing radius	1650 mm	1660 mm
	Swing radius (R boom swing)	1240 mm	1250 mm
	Swing radius (L boom swing)	1590 mm	1600 mm
G	Maximum height at minimum swing radius	2550 mm	2545 mm
H	Max. blade height	290 mm	290 mm
I	Max. blade depth	375 mm	375 mm
J	Offset boom (L)	400 mm	400 mm
K	Offset boom (R)	625 mm	625 mm
	Max. boom swing angle (L)	58°	58°
	Max. boom swing angle (R)	51°	51°
	Arm head distance (equipment retracted)	1375 mm	1375 mm

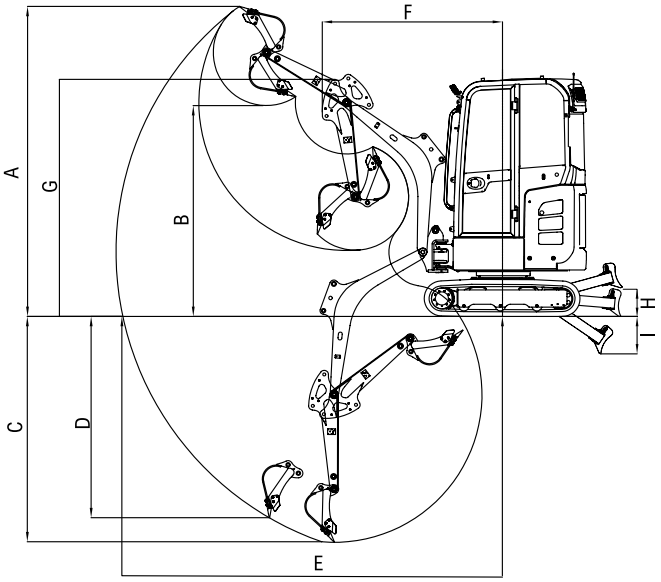

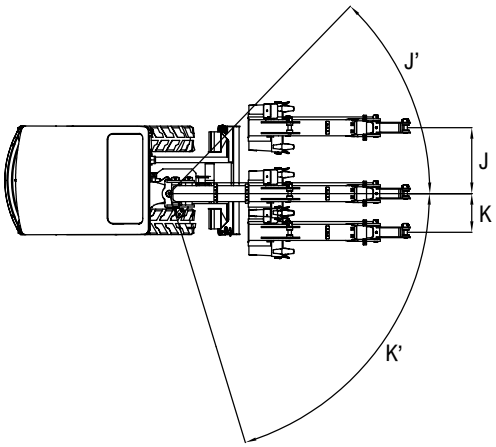

SY20C

STANDARD/OPTIONAL EQUIPMENT

OPERATORS COMFORT / CAB	
Air conditioning system	•
Bluetooth radio & speaker	•
USB socket (music)	•
Armrests (adjustable)	•
12V outlets	•
Wiper	•
AUX 1 on Joystick	•
AUX 2 on Joystick	•
Suspended seat	•
Stored hydraulic settings for attachments	•
Up and over front window	•
Cupholder	•

WORKING LIGHTS	
2 x LED work lights - front	•
1 x LED worklight - boom	•
Magnetic Beacon	•

UNDERCARRIAGE	
Rubber tracks (230 mm)	•
Expanding and retracting undercarriage (980 - 1350mm)	•
Steel tracks	OPT
Holes/loops for fixing	•

ENGINE	
Diesel filter	•
Air filter	•
Air filter guard	•

SAFETY & SECURITY	
Battery master switch	•
Travel alarm	•
Beacon lamp	•
Emergency stop button	•
Retractable seat belt	•
All-round mirrors	•
Lockable bonnet	•
EVI telematics system	•
ROPS and FOPS cab	•

WORKING EQUIPMENT	
Hammer & shear line proportional on joystick (w/ piping)	•
Rotation line proportional on joystick (w/ piping)	•
Flow adjustment for attachments	•
Double-acting circuit for hydraulic quick coupler (w/ piping)	OPT

HYDRAULIC SYSTEM	
Swing brake	•
2-speed travel	•
Main filter	•
Hyd. pre-pressure operating joysticks	•

The standard and optional equipment can differ depending on the country in which the machine is delivered. Please contact your local dealer for more information.

SANY

FORGING THE FUTURE TOGETHER

SANY HEAVY MACHINERY (UK) LTD
Unit 6, M8 Interlink Estate,
Coatbridge, Glasgow, ML5 4RP
Tel: 0330 2021 318
Email: info@sanyuk.com

Sanyuk.com

Not all products are available in all markets. As part of our continuous improvement process, we reserve the right to modify specifications and designs without giving prior notice. Machines shown may feature additional options other than the standard machine specification.

HEX - SY20C - 10 - 2026 - EU - V2