SY19E

MINI EXCAVATOR

Max. Gross Power
18 kW / 2,200 rpm

Operating Weight
2,050 kg

Max. Dig Depth
2,360 mm



SANY:

QUALITY CHANGES THE WORLD

Founded in 1989, SANY has grown into one of the world's largest construction equipment manufacturers, with global R&D and production – including European facilities – and machines working in 150+ countries. Our range spans excavators, road and port machinery, and cranes, built with proven manufacturing heritage and modern quality systems.

A GLOBAL LEADER BEHIND EVERY RANGE

From compact excavators to high-tonnage earthmovers, cranes, telehandlers, concrete machinery, road equipment and more, SANY's worldwide product range reflects decades of innovation, investment, and real-world experience.

This broad international range is proven on job sites in over 150 countries, ensuring every machine delivered to Europe is backed by extensive testing, real-world performance and the strength of a global supply chain.

ENGINEERED FOR OUR EUROPEAN CUSTOMERS

Every SANY machine destined for Europe is engineered to meet European regulations and real-world use cases – from CE and Stage V compliance to region-specific specifications and options.

For European construction customers, this worldwide capability translates directly into trust. SANY selects and engineers its product line specifically for local requirements, combining global innovation with European-quality standards, dealer support and service.

GLOBAL MANUFACTURING EXCELLENCE

SANY's long-standing commitment to quality and innovation – supported by advanced intelligent manufacturing and a sustained 5-7% of annual revenue reinvested into R&D – results in machines that deliver reliability, efficiency, and consistent performance on site.

With state-of-the-art production facilities and rigorous global testing standards, every machine is built to withstand demanding conditions and deliver long-term value.

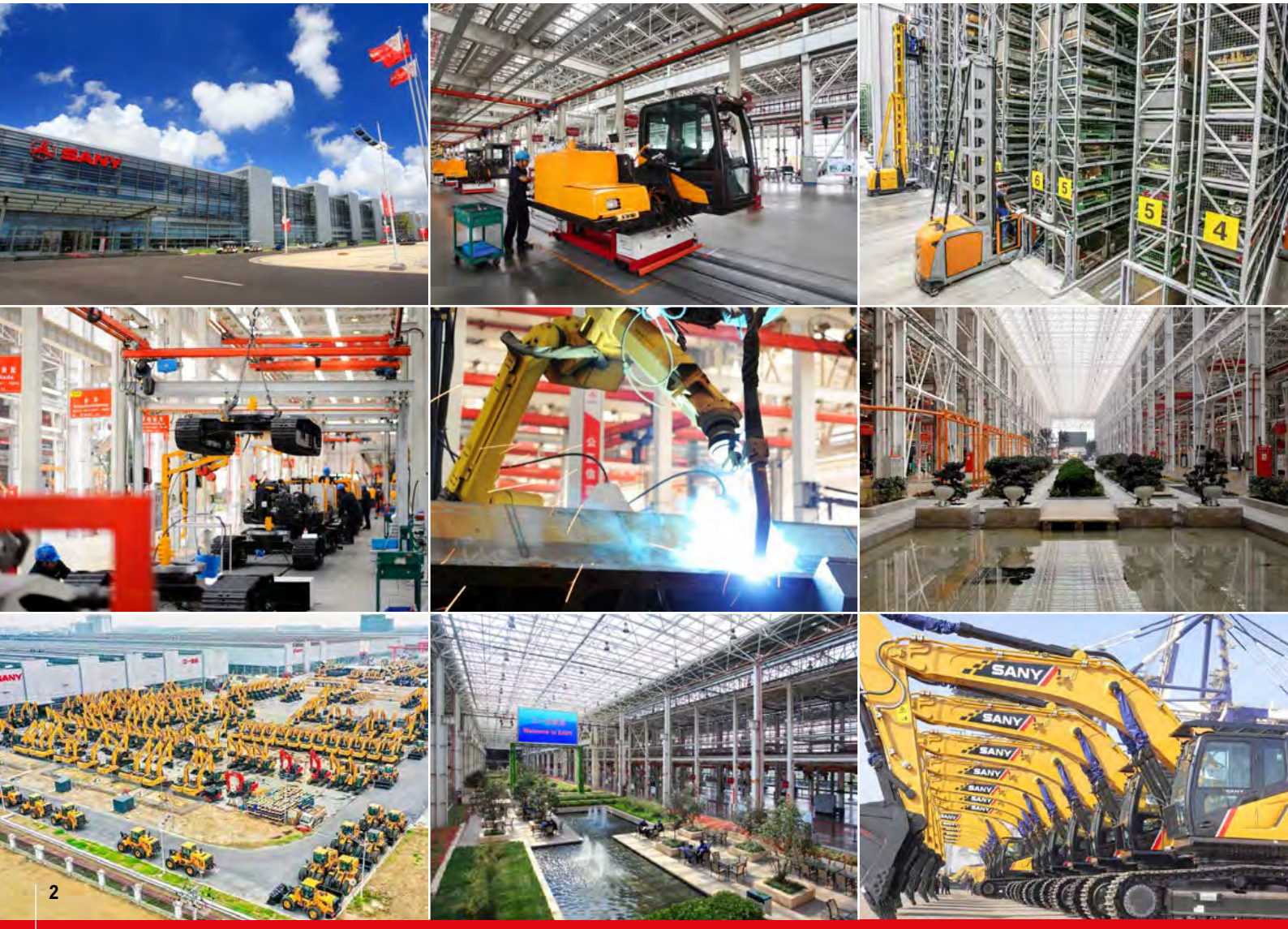

INTRODUCING THE

SY19E

Introducing the SY19E — compact, quiet and fully electric, delivering the performance you expect in a highly transportable, zero-emissions package. Powered by a cobalt-free lithium-iron phosphate battery, it offers fast, flexible charging and long-term durability — built to perform wherever the job takes you.

Ideal for landscaping, utilities and general construction, the SY19E combines responsive hydraulics with compact dimensions, allowing confident operation on tight, sensitive or enclosed sites while maintaining full productivity with zero exhaust emissions.



WHY CHOOSE SANY MINI EXCAVATORS

WORLD RENOWNED COMPONENTS

SANY uses proven, top-tier components to deliver long-lasting reliability – meaning you benefit from fewer breakdowns, longer service life, and lower ownership costs.

GREAT VALUE, UNCOMPROMISED QUALITY

You can have confidence in your return on investment. SANY mini excavators are loaded with the latest innovations to help reduce costs, increase productivity and protect resale value.

INDUSTRY LEADING 5 YEAR WARRANTY

Built to last – and backed by an industry-leading warranty – giving you lower risk, predictable costs, and confidence on every job.

LOW OPERATING COSTS

Simple engineering, readily available parts, and low fuel consumption reduce ongoing running costs – a major advantage in Europe's high-cost markets.

LOCAL SUPPORT

Europe-wide expert dealers and value-added aftermarket support keep your machine running, minimise downtime, and simplify ownership.

STANDARD ADVANCED FEATURES

SANY excavators include all essential features as standard – no costly add-ons or custom tweaks required.

SY19E

PRODUCTIVITY

Engineered for maximum uptime, the SY19E combines zero-emission versatility with a compact, easily transportable design that excels in both indoor and outdoor environments. By pairing long-range battery endurance and flexible charging options with load-sensing hydraulics for faster cycle times, this machine maintains peak productivity across a diverse array of tasks thanks to its full attachment compatibility.



HYDRAULICS DESIGNED FOR PRODUCTIVITY

SANY's twin auxiliary hydraulics as standard allow you to operate a wider range of attachments with powered movement in both directions, giving you reversible control and faster task changes.

SANY's hydraulic quick hitch enables in-cab attachment changes within seconds, eliminating manual pin removal, reducing exposure to pinch points, and minimising downtime between tasks.

Instant torque along with a best-in-class pump, valve block and slew motors delivers smooth, responsive control for precise work, especially useful in confined or sensitive applications.

COMPACT DIMENSIONS

With compact dimensions you can access tight sites, work flush to walls or obstacles, and minimise repositioning for faster setup - all with low ground impact.

SANY's swing boom design lets you offset the boom to the left or right, so you can dig alongside walls and in tight spaces without rotating/ repositioning the machine, reducing ground disturbance.

EASY TRANSPORTATION

Integrated tie-down points on the track frame and dozer blade simplify secure trailering — cutting loading time, improving load restraint compliance, and reducing risk of damage during transport.

VERSATILE OPERATION

Two speed tracking allows the operator to switch between high and low speeds based on the terrain and task.

With an expanding undercarriage (980–1350mm) and an adjustable dozer blade, the SY19E delivers greater stability and enhanced on-site versatility – helping operators work more confidently and efficiently in varying ground conditions.



SY19E

ZERO EMISSIONS, MINIMAL DISRUPTION

The SY19E delivers fully electric, zero-emissions performance — ideal for indoor, urban and out-of-hours work. A safe, lithium-iron phosphate battery provides up to seven hours of run time, with flexible charging from DC fast, industrial or domestic power supplies. Long battery life also reduces total cost of ownership while supporting strong residual values.

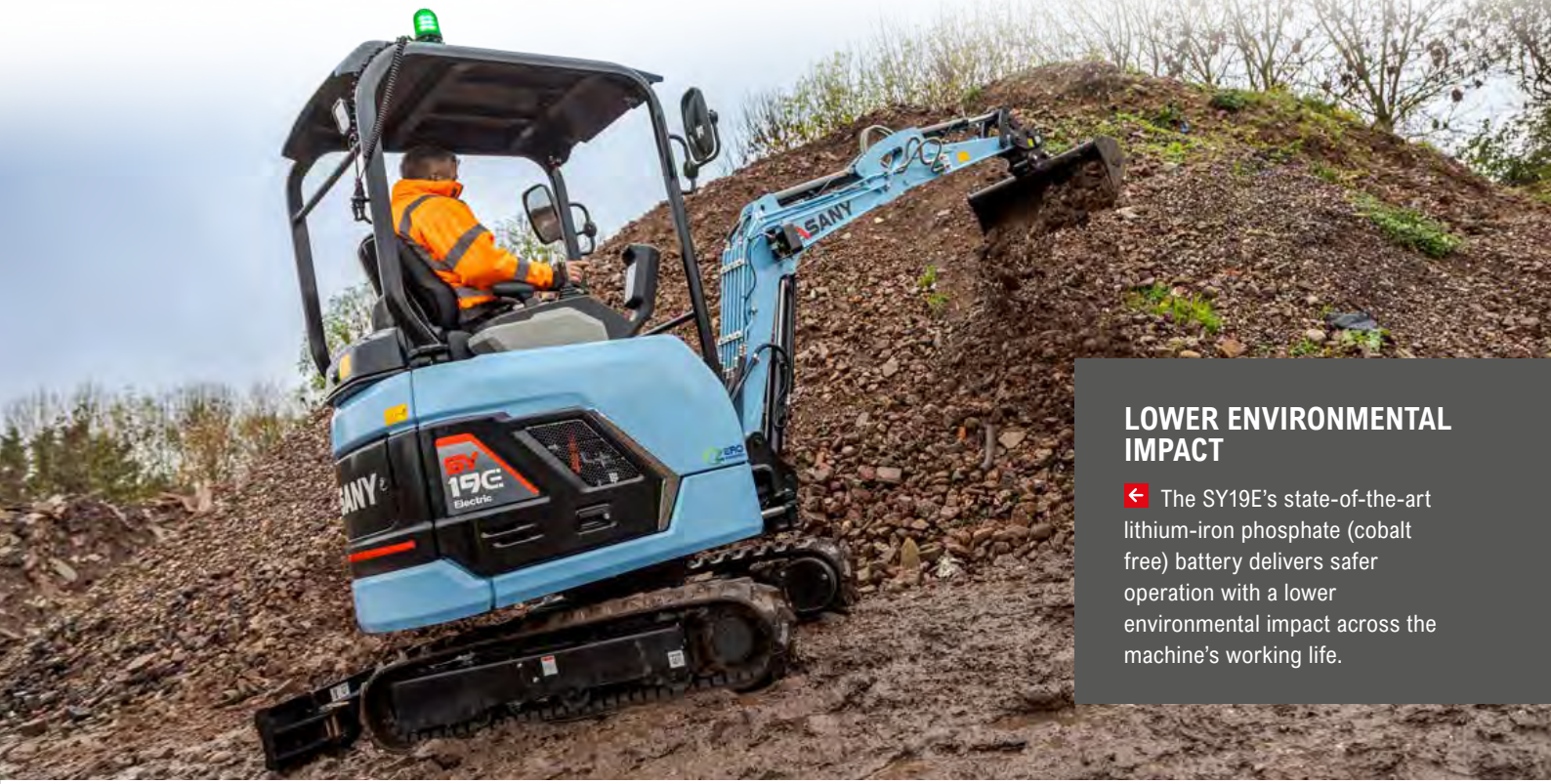

LOWER ENVIRONMENTAL IMPACT

The SY19E's state-of-the-art lithium-iron phosphate (cobalt free) battery delivers safer operation with a lower environmental impact across the machine's working life.

LONG-LIFE OPERATION

Our advanced battery technology is engineered for long-term durability, delivering sustained performance year after year. A longer battery lifespan helps reduce total cost of ownership and protects long-term residual value.

MINIMAL DISRUPTION

Ultra-low noise levels of 66 dB(A) inside and 83 dB(A) outside the machine allows work in residential areas, indoors, and during early mornings or late evenings with minimal disruption.

EXTENDED RUN TIME

Up to seven hours of run time per charge keeps the SY19E working for longer, reducing interruptions and unplanned charging stops (application and temperature dependent).

FLEXIBLE CHARGING OPTIONS

With an automotive-grade CCS2 DC charging socket as standard, the SY19E can be charged almost anywhere using DC fast, industrial or domestic power giving greater flexibility on site and between jobs. Fast charge capability also allows rapid charging at any automotive fast charge station such as petrol and service stations, hotels and car parks.

Charge times range from 1 hr on a DC charge, 2.5 hrs on an industrial 360v charge or 10 hrs on a domestic 240v charge.



SY19E

OPERATOR ENVIRONMENT

The SY19E electric mini excavator is designed to help you work smarter and more comfortably. A modern workspace and intuitive controls reduce fatigue and improve precision, while fast, flexible charging keeps downtime to a minimum. Quieter, cleaner and fully equipped as standard, the SY19E delivers efficient performance that supports your operators and protects your productivity on every job.

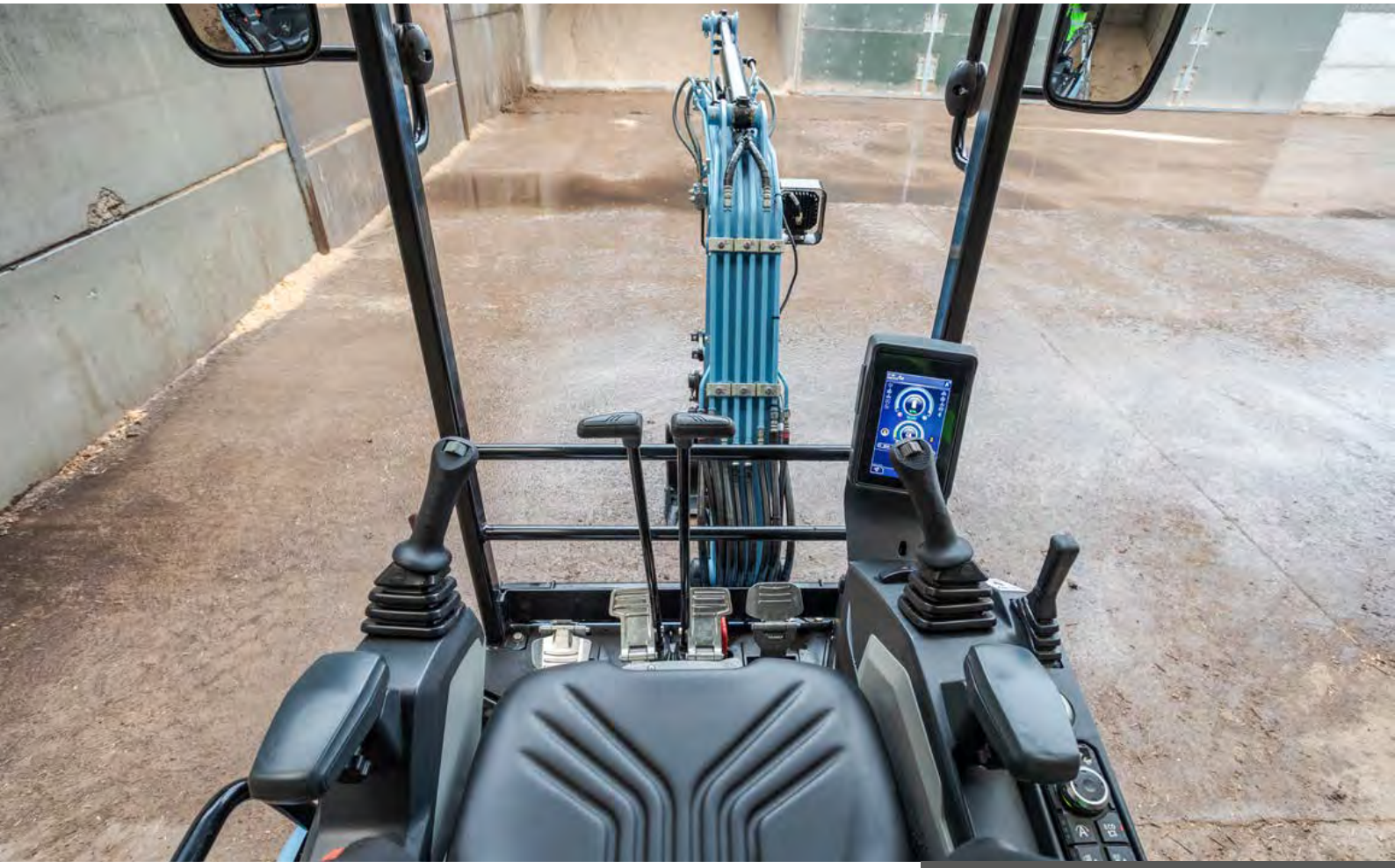

PREMIUM COMFORT

↑ The ergonomic operator environment of the SY19E features a mechanical suspension seat and adjustable armrests, designed to keep operators comfortable, focused, and productive.

The quiet, low-noise operation of 66 dB(A) inside and 83 dB(A) outside the machine creates a more comfortable operating environment, allowing the machine to work effectively in noise-sensitive areas.



TOUCHSCREEN DISPLAY

↑ Clear instrumentation and a high-resolution colour display make machine operation easier and more intuitive, helping operators work with confidence and precision.

EVERYDAY EASE

← Joysticks with dual proportional control circuits enable safe and precise operation of the machine and its attachments.

Streamlined charging with a single connection, reduces cabling and equipment for effortless operation.

JOB SITE AWARENESS

↑ With its canopy design and all-round mirrors, the SY19E provides clear visibility of the surrounding work-space, improving operator awareness and safety on site.

SY19E

SAFETY & SECURITY

With its smart safety systems, fully certified protective canopy, and high-visibility LED lighting the SANY SY19E delivers a high-performance, zero-emission digging solution that prioritises the well-being of the operator, the environment, and the surrounding job site.



PROTECTING BYSTANDERS

Energy efficient LED work lights are positioned on the front and rear of cab and boom for maximum versatility in poor or low light conditions.

A travel alarm and rotating warning beacon help to increase visibility, attract attention and ensure safety on site.

STRUCTURAL INTEGRITY

ROPS and TOPS certification ensures the SY19E meets stringent rollover and tip over protection standards.

Heavy-duty steel bodywork provides robust protection against on-site damage, safeguarding vital structures and contributing to reduced lifetime ownership costs.

EMERGENCY SHUTDOWN

Featuring both a battery disconnect switch and an emergency stop button, the system allows immediate power isolation to enhance operator and site safety.

ADVANCED SECURITY

Lockable service doors protect critical components and fuel systems, preventing unauthorised access and enhancing site security.

Backed by the CESAR Datatag Scheme for proven theft deterrence and equipped with CESAR ECV, these machines allow swift and dependable verification of emissions category.

Advanced anti-theft EVI telematics employ GPS tracking and configurable geofencing, this along with a password protected keyless stop/start function, safeguard the machine from theft and unauthorised use.

SY19E

SERVICE & MAINTENANCE

By eliminating the complexities of a traditional diesel engine, the SY19E significantly reduces total cost of ownership through lower maintenance requirements. Its streamlined electric drivetrain features fewer moving parts and a virtually maintenance-free lithium-iron battery, ensuring consistent, reliable performance with far less downtime for servicing.



MAINTENANCE MADE EASY

SANY mini excavators are engineered for streamlined service and maintenance, with design features that make routine upkeep faster and more efficient.

A fully electric drive with a reduced number of serviceable machine parts, reduces maintenance downtime and servicing costs.

A wide-opening engine door provides ground-level access to all key service points, ensuring that daily checks are quick, simple, and easy to perform.

ROBUST STRUCTURES

Integrated guarding for the dozer blade and hydraulic cylinders provides robust protection against on-site impacts, minimising the risk of component damage, unplanned downtime, and expensive repair work.

COMMON, PREMIUM COMPONENTS

Produced in advanced manufacturing facilities in China, SANY excavators are built for high quality and lasting durability, utilising high-spec components from reputable global manufacturers.

Shared componentry across the range, combined with an extensive European dealer network, ensures rapid response and efficient turnaround for any machine repair.





INCREASED WORKING HOURS

With 500-hour service intervals, maintenance frequency is reduced, lowering operating costs and improving machine availability.

The lithium-iron phosphate battery equipped with BMS (battery management system) and thermal management ensures battery life and quality during operation and charging.

SY19E

ATTACHMENTS

SANY machines offer extended capability through a broad selection of easily interchangeable attachments. This range enables efficient performance across varied tasks such as digging, drilling, land clearing, material handling, and demolition.



BUCKETS

SANY provides a complete range of excavator buckets designed to enhance your machine's efficiency. From general-purpose digging buckets to more specialised options, they enable you to tackle a wide variety of job sites.

QUICK HITCH

Equipped with quick hitches as standard, SANY machines enable rapid attachment changes, helping you get more done in less time. By reducing manual labour and ensuring a secure fit, they expand the machine's versatility and keep your operations running smoothly.

BREAKERS

SANY breakers have been designed to deliver powerful breaking performance, long-lasting durability, and high efficiency. They are suitable for a wide range of applications such as quarry, tunneling, civil construction, trenching, road & landscaping etc.

GRABS

SANY excavator grabs deliver powerful, reliable material handling with high clamping force, smooth hydraulic control and durable steel construction. The result is a cost-effective, high-performance attachment that boosts productivity and control on every job.*

*SANY attachment options may vary depending on country.

SY19E

YOUR UPTIME. OUR PRIORITY.

Rely on SANY's value-added aftermarket services to keep your equipment operating at peak efficiency. From proactive maintenance to reducing unexpected downtime and controlling operating costs, we provide the support your business depends on. Our European service solutions further boost performance, streamline maintenance tasks, and improve profitability across your fleet.

5 YEAR WARRANTY

Built on a global reputation for reliability and durability, SANY excavators come with an unmatched 5-year warranty* – one of the strongest in the industry.

It's a clear statement of the confidence we have in our machines and our commitment to your uptime. Your investment is protected from day one, giving you the assurance that if an issue arises, you're fully covered.

*Terms and conditions apply.

SERVICE AND SUPPORT

SANY's extensive network of certified technicians and dealer partners provides on-site service and technical expertise designed to minimise downtime and maintain peak machine performance.

Working in coordination with our advanced manufacturing facilities in China, our European teams combine global engineering capability with practical local support.

SANY GENUINE PARTS

SANY genuine parts are engineered, rigorously tested, and manufactured to the exact specifications required by your machine. Their precise fit and compatibility guarantee maximum performance and system integrity.

By maintaining correct operational tolerances, they enhance on-site safety and significantly reduce the risk of unplanned failures or downtime. All genuine parts are supported by a 12-month warranty for added assurance.





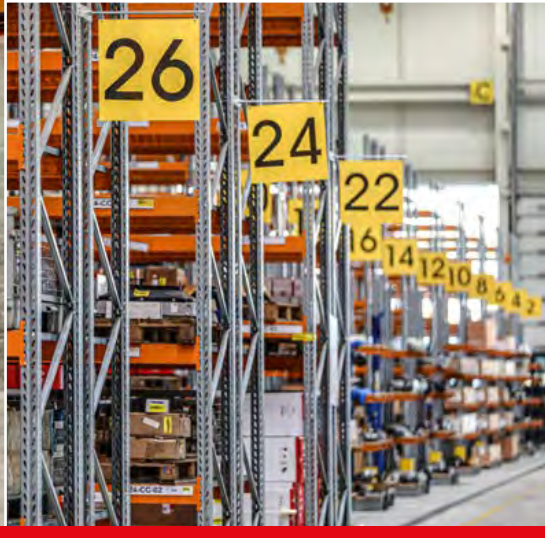

SY19E

INTELLIGENT SUPPORT

SANY's connected tools give you clarity, confidence, and control on every project. ROOTPILOT brings precision to the bucket; EVI Telematics brings visibility to the fleet. Together, they reduce downtime, cut costs, and boost productivity. Smart technology – driving your success.



EVI e.vision

Designed exclusively for Europe, our digital fleet management system EVI gives you complete visibility of your machines whenever and wherever you need it. By simplifying fleet oversight, it enables better decision-making, lowers costs, and improves uptime across your operations. With built-in safety and security features that let you monitor location and usage in real time, you gain greater control and peace of mind.

Key benefits include:

- Enhanced fleet visibility and remote machine management
- Set authorised operating hours and create geofenced security zones to reduce theft risk and misuse
- Greater visibility of routine checks and machine health
- Multi-channel, real-time communication for faster decision-making
- Operating report analysis for smarter, data-led decision-making
- Customer account management for personalised, data-backed communication

SANY ROOTPILOT

SANY ROOTPILOT is a high-precision 3D machine-control system that uses GNSS, IMU sensors, and smart algorithms to guide excavators in real time. It gives operators clear, intuitive 3D feedback for faster, safer, and more accurate digging.

ROOTPILOT installs quickly, works with multiple machines and attachments, and syncs designs through the cloud so every operator works from the same plan. It's ideal for highways, municipal works, and foundation projects where precision is critical.

Available in Fundamental and Premium versions, ROOTPILOT supports everything from basic grading to full 3D model guidance, offsets, layer control, and complex digital designs.

Main customer benefits:

- ±3 cm accuracy for first-time-right excavation
- Avoidance of underground utilities and hazards
- Lower fuel, labour, and rework costs
- Faster production with fewer survey checks
- Works with 2D or full 3D design models
- Boosts operator confidence and consistency

SY19E

SPECIFICATION

ENGINE

Model	Vmax
Battery type	LFP - Lithium iron phosphate battery (cobalt free)
Motor type	Permanent magnet synchronous motor
Continous operating power	10 Kw / 2,000 rpm
Max. Rated power	18 Kw / 2,200 rpm
Nominal torque	44 Nm
Rated voltage	358 V
Rated capacity	67 Ah
Fully charged battery capacity	24 kWh
Charge time	DC 1 hr / Industrial (360v) 2.5 hrs / Domestic (240v) 10 hrs
Run time (depending on application)	3 - 7 hrs

HYDRAULIC SYSTEM

Main pump	Variable-displacement axial piston pumps with electronic control
Max. oil flow	90 L/min

PERFORMANCE

Swing speed	10 rpm
Max. travel speed	3.2 km/h
Max. travel force	15.6 kN
Gradeability	50.6%
Bucket capacity	0.04 m^3
Ground pressure	0.028 Mpa
Bucket digging force (ISO)	15.2 kN
Arm digging force (ISO)	12 kN

SERVICE REFILL CAPACITIES

Drive (per side)	0.33 L
Hydraulic system	21 L

Based on theoretical calculation at max flow with no load.

Subject to alterations.

In the interest of continual equipment development, SANY reserves the right to change these specifications at any time without prior notification.

OPERATING WEIGHT

2050 kg
Note: Includes 75kg (165 lb) operator and excludes any attachments or hitch

UNDER & UPPER STRUCTURE

Boom length	1810 mm
Arm length	1130 mm
Bottom rollers	3
Rotation device	Axial piston motor, planetary gear, singlerow slewing ring, hydraulic parking brake.
Undercarriage	Reinforced undercarriage. Welded drive frame.

RELIEF VALVE SETTINGS

Implement circuit	24.5 MPa
Swing circuit	16.2 MPa
Travel circuit	24.5 MPa
Pilot circuit	3.5 MPa

SOUND LEVEL

Noise level inside cabin	66 dB(A)
Noise guaranteed value	83 dB(A)

SY19E

SPECIFICATION

LIFTING CAPACITIES - DOZER BLADE DOWN

Load Point Height (B)		Radius (A) 1.5 m		2.0 m		2.5 m		3.0 m		Digging Reach Max	
3.0 m	kg									285	285
2.0 m	kg					267	253	271	271	278	278
1.0 m	kg			483	486	371	370	316	306	288	244
Ground line	kg	826	826	631	528	456	383	357	295	304	252
–1.0 m	kg	819	819	563	529	407	382			318	318

LIFTING CAPACITIES - DOZER BLADE UP

Load Point Height (B)		Radius (A) 1.5 m		2.0 m		2.5 m		3.0 m		Digging Reach Max	
3.0 m	kg									285	285
2.0 m	kg					253	253	271	271	270	278
1.0 m	kg			483	483	370	370	296	306	235	244
Ground line	kg	811	826	514	528	371	383	285	295	243	252
–1.0 m	kg	819	819	514	529	370	382			316	318

1. This capability is calculated according to GB/T 13331, ISO10567 standards. The limiting coefficient of the hydraulic system is 0.87, and the tipping coefficient is 0.75.
2. Marked with * is limited by hydraulic pressure, marked without * is limited by stability.
3. The lifting point is the support hole in front of the bucket rod (excluding the weight of the bucket). If there are additional accessories such as buckets, they should be deducted from the above lifting weight.
4. A- Radius of loading point (m), B- Loading point height (m).

SY19E

SPECIFICATION

DIMENSIONS (TRANSPORT)

A	Transport length	3624 mm
B	Transport width	980/1350 mm
C	Height over cabin / ROPS	2440 mm
D	Cab width	980 mm
E	Blade height	270 mm
F	Track width	230 mm
G	Track gauge	750/1120 mm
H	Min. ground clearance	160 mm
I	Tail swing radius	920 mm
J	Track ground length	1585 mm
K	Track length	1225 mm
L	Track height	375 mm
M	Counterweight clearance	450 mm
N	Undercarriage width (blade)	980/1350 mm
	Height of boom – transport	1350 mm
	Engine cover height	1275 mm

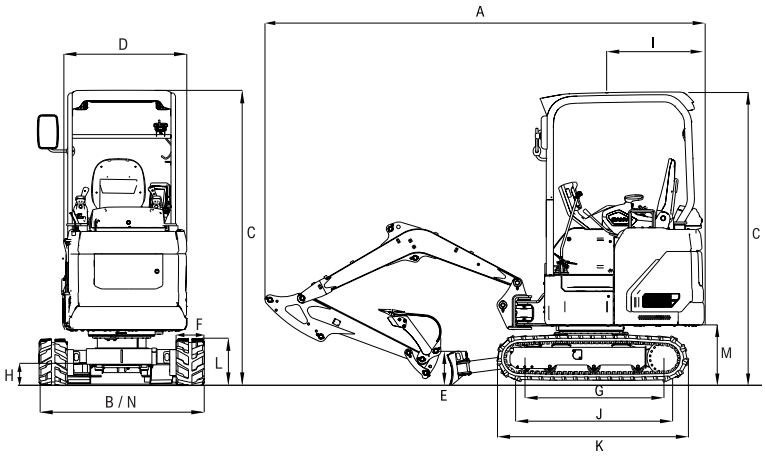

WORKING AREA

A	Max. digging height	3665 mm
B	Max. dumping height	2635 mm
C	Max. digging depth	2360 mm
D	Max. vertical digging depth	2215 mm
E	Max. digging reach	4000 mm
F	Min. swing radius	1655 mm
	Maximum height at minimum swing radius	2745 mm
	Max. clearance with blade up	310 mm
	Max. blade digging depth (blade down)	320 mm
	Max. boom swing angle (L)	595 mm
	Max. boom swing angle (R)	350 mm

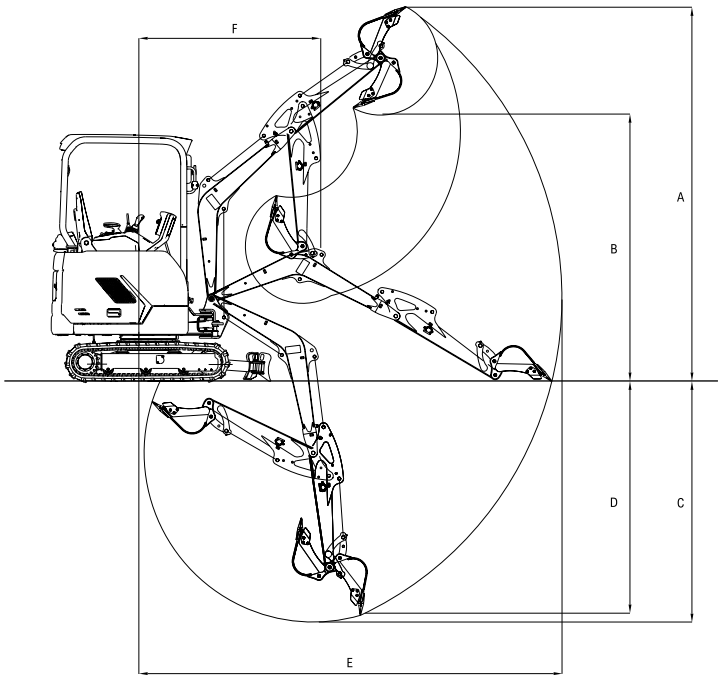

SY19E

STANDARD/OPTIONAL EQUIPMENT

OPERATORS COMFORT / CAB

	SY19E
Mechanical suspension seat	•
Adjustable armrests	•
12V outlets	•
AUX 1 on joystick	•
AUX 2 on joystick	OPT
Stored hydraulic settings for attachments	•
Cup holder	•

WORKING LIGHTS

	SY19E
Lights x 2 – front (LED)	•
Lights x 1 – boom (LED)	•

UNDERCARRIAGE

	SY19E
Rubber tracks (230 mm)	•
Cylinder guards – dozer blade	•
Holes / loops for fixing	•
Adjustable undercarriage (980 - 1350 mm)	•

MOTOR

	SY19E
220 - 400V charging cable (inc adapters)	•

SAFETY & SECURITY

	SY19E
ROPS and TOPS canopy	•
Battery master switch	•
Travel alarm	•
Emergency stop button	•
Retractable seatbelt	•
Lockable bonnet	•
Lockable fuel cap	•
EVI telematics	•

WORKING EQUIPMENT

	SY19E
Boom and arm load holding valves with overload indicator	•
Cylinder guards – boom	•
Double acting circuit for hydraulic quick coupler with piping	OPT
Flow adjustment for attachments	•

HYDRAULIC SYSTEM

	SY19E
2 speed travel	•
Piping for AUX 1 circuit	•
Control valve with main relief valve	•
Oil suction filter	•
Return filter	•

The standard and optional equipment can differ depending on the country in which the machine is delivered. Please contact your local dealer for more information.

SANY



SANY HEAVY MACHINERY (UK) LTD
Unit 6, M8 Interlink Estate,
Coatbridge, Glasgow, ML5 4RP
Tel: 0330 2021 318
Email: info@sanyuk.com

Sanyuk.com

Not all products are available in all markets.
As part of our continuous improvement process, we reserve the right to modify specifications and designs without giving prior notice. Machines shown may feature additional options other than the standard machine specification.

HEX - SY19E - 03.2026 - EU - V1