SY16C / SY18C / SY18U

MINI EXCAVATORS

Max. Gross Power
14.6 kW / 2,400 rpm

Operating Weight
1,865 kg (SY16C) / 1,910 kg (SY18C)
1,925 kg (SY18U)

Max. Dig Depth
2,360 mm (SY16C/SY18C)
2,385 mm (SY18U)



SANY:

QUALITY CHANGES THE WORLD

Founded in 1989, SANY has grown into one of the world's largest construction equipment manufacturers, with global R&D and production – including European facilities – and machines working in 150+ countries. Our range spans excavators, road and port machinery, and cranes, built with proven manufacturing heritage and modern quality systems.

A GLOBAL LEADER BEHIND EVERY RANGE

From compact excavators to high-tonnage earthmovers, cranes, telehandlers, concrete machinery, road equipment and more, SANY's worldwide product range reflects decades of innovation, investment, and real-world experience.

This broad international range is proven on job sites in over 150 countries, ensuring every machine delivered to Europe is backed by extensive testing, real-world performance and the strength of a global supply chain.

ENGINEERED FOR OUR EUROPEAN CUSTOMERS

Every SANY machine destined for Europe is engineered to meet European regulations and real-world use cases – from CE and Stage V compliance to region-specific specifications and options.

For European construction customers, this worldwide capability translates directly into trust. SANY selects and engineers its product line specifically for local requirements, combining global innovation with European-quality standards, dealer support and service.

GLOBAL MANUFACTURING EXCELLENCE

SANY's long-standing commitment to quality and innovation – supported by advanced intelligent manufacturing and a sustained 5-7% of annual revenue reinvested into R&D – results in machines that deliver reliability, efficiency, and consistent performance on site.

With state-of-the-art production facilities and rigorous global testing standards, every machine is built to withstand demanding conditions and deliver long-term value.

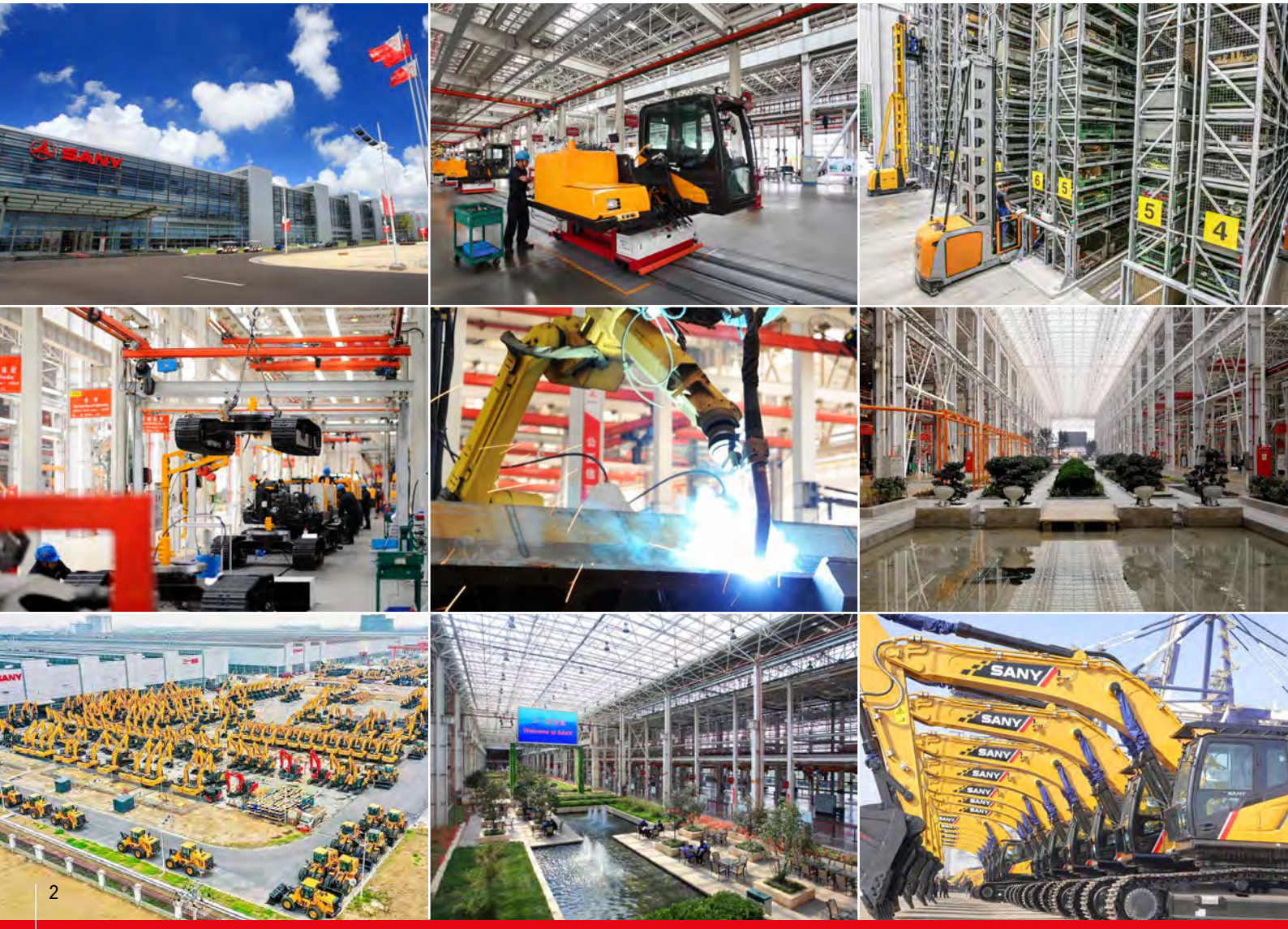

INTRODUCING THE

SY16C / SY18C / SY18U

Compact in size but strong in performance, the SANY SY16C, SY18C and SY18U give you the power to handle demanding jobs while staying compact enough to work confidently in restricted spaces. Designed for modern construction, landscape and small-scale projects, they help you maximise productivity, reduce repositioning time, and keep jobs moving efficiently.

Fuel-efficient Yanmar engines and advanced load-sensing hydraulics work together to lower running costs while delivering smooth, responsive control—helping you protect margins without compromising performance.



WHY CHOOSE SANY MINI EXCAVATORS

WORLD RENOWNED COMPONENTS

SANY uses proven, top-tier components to deliver long-lasting reliability – meaning you benefit from fewer breakdowns, longer service life, and lower ownership costs.

GREAT VALUE, UNCOMPROMISED QUALITY

You can have confidence in your return on investment. SANY mini excavators are loaded with the latest innovations to help reduce costs, increase productivity and protect resale value.

INDUSTRY LEADING 5 YEAR WARRANTY

Built to last – and backed by an industry-leading warranty – giving you lower risk, predictable costs, and confidence on every job.

LOW OPERATING COSTS

Simple engineering, readily available parts, and low fuel consumption reduce ongoing running costs – a major advantage in Europe's high-cost markets.

LOCAL SUPPORT

Europe-wide expert dealers and value-added aftermarket support keep your machine running, minimise downtime, and simplify ownership.

STANDARD ADVANCED FEATURES

SANY excavators include all essential features as standard – no costly add-ons or custom tweaks required.

SY16C / SY18C / SY18U

PRODUCTIVITY

Designed to perform where space is limited, the SANY SY16C, SY18C and SY18U enable operators to work efficiently and with confidence in confined or demanding environments. The offset swing boom, expandable undercarriage, and twin auxiliary hydraulics streamline setup, reduce repositioning, and support faster attachment changes, helping maximise productivity on every task.



COMPACT DIMENSIONS

The SY16C and SY18C offer conventional tail swing for strong, stable performance in a compact footprint, while the zero tail swing SY18U provides maximum manoeuvrability—allowing you to work confidently in the tightest spaces without compromising capability.

SANY‘s swing boom design lets you offset the boom so you can dig alongside walls and in tight spaces without rotating/repositioning the machine, reducing ground disturbance.

Integrated tie-down points on the track frame and dozer blade simplify secure trailering – cutting loading time, improving load restraint compliance, and reducing risk of damage during transport.

HYDRAULICS DESIGNED FOR PRODUCTIVITY

SANY’s load-sensing twin auxiliary hydraulics as standard allow you to operate a wider range of attachments with powered movement in both directions, giving you reversible control and faster task changes.

SANY‘s hydraulic quick hitch enables in-cab attachment changes within seconds, eliminating manual pin removal, reducing exposure to pinch points, and minimising downtime between tasks.

VERSATILE OPERATION

The SY16C, SY18C and SY18U comes factory-equipped to make them plug-and-play with most common attachments—breakers, grapples, tilt buckets, augers.

With an expanding undercarriage (980 – 1350mm) and an adjustable dozer blade, the SANY SY16C, SY18C and SY18U deliver greater stability and enhanced on-site versatility—helping operators work more confidently and efficiently in varying ground conditions.



SY16C / SY18C / SY18U

EFFICIENCY

Engineered to deliver more from every drop of fuel, the SY16C, SY18C and SY18U combine an ultra-efficient YANMAR Stage V engine with smart fuel management and advanced hydraulic technology. The result is strong, responsive performance with lower fuel consumption helping operators maximise productivity while keeping operating costs firmly under control.



CONSUMING LESS, STORING MORE

Equipped with a fuel-saving Stage V engine, the SY16C, SY18C and SY18U deliver 14.6 kW of high-performance power at 2,400 rpm.

A 20-litre (SY16/18C) 21-litre (SY18U) fuel tank and efficient consumption allow for extended refuelling intervals, cutting downtime and fuel runs so the machine stays productive longer between stops.

ENERGY-EFFICIENT HYDRAULICS

SANY's load-sensing hydraulics deliver only the flow and pressure the working circuits need, so the system wastes less energy and burns less fuel. A well-matched engine and hydraulic system that measures pump output to demand, reducing wasted flow and fuel resulting in lower running costs for the customer.



EFFICIENT OPERATION

SANY's two-speed tracking lets the operator choose high or low travel to match terrain and task reducing unnecessary revs and therefore fuel usage.

SY16C / SY18C / SY18U

OPERATOR ENVIRONMENT

Designed to keep operators comfortable, alert, and productive all day long, the SY16C, SY18C and SY18U feature a carefully engineered operator environment. Ergonomically positioned controls, supportive seating, and a practical layout combine to create a safe, comfortable workspace that supports consistent efficiency on every job.



SY16C CANOPY

WORK STATIONS

The SY18C mini excavator is available with operators cab, whilst the SY16C and zero tail swing SY18U are both canopy machines.

PREMIUM COMFORT

The ergonomic operator environment of the SY16C and SY18C excavators features a high-back seat, while the SY18U comes equipped with a mechanical suspension seat, designed to keep operators comfortable, focused and productive.

A standard fit heater is included on the SY18C, keeping operators comfortable while they work in cooler weather conditions.

JOB SITE AWARENESS

All-round mirrors provide clear visibility of the surrounding workspace, improving operator awareness and safety on site.

EVERYDAY EASE

Clear instrumentation and a high-resolution colour display make machine operation easier and more intuitive, helping operators work with confidence and precision.

The quiet, low-vibration engine reduces noise and vibration levels to a minimum, creating a more comfortable operating environment and allowing the machine to work effectively in noise-sensitive areas.



SY18C CAB

SY16C / SY18C / SY18U

SAFETY & SECURITY

Built with durability and operator protection at their core, SANY mini excavators combine heavy-duty structural design with integrated stability and safety systems suited to tough working conditions. Optimised visibility, robust construction, and intelligently placed safety features work together to improve site awareness, helping operators work with greater confidence, control, and reduced risk in demanding environments.



PROTECTING BYSTANDERS

Energy efficient LED work lights are positioned on the front of cab and boom for maximum versatility in poor or low light conditions.

A travel alarm and rotating warning beacon help to increase visibility, attract attention and ensure safety on site.

STRUCTURAL INTEGRITY

ROPS, TOPS and FOPS certification ensures the SY16C, SY18C and SY18U excavators meets stringent rollover, tip over and falling objects protection standards.

Heavy-duty steel bodywork provides robust protection against on-site damage, safeguarding vital structures and contributing to reduced lifetime ownership costs.

EMERGENCY SHUTDOWN

Featuring both a battery disconnect switch and an emergency stop button, the system allows immediate power isolation to enhance operator and site safety.

ADVANCED SECURITY

Lockable service doors protect critical components and fuel systems, preventing unauthorised access and enhancing site security.

Backed by the CESAR Datatag Scheme for proven theft deterrence and equipped with CESAR ECV, these machines allow swift and dependable verification of emissions category.

Advanced anti-theft EVI telematics employ GPS tracking, and configurable geofencing to safeguard the machine from theft and unauthorised use.

SY16C / SY18C / SY18U

SERVICE & MAINTENANCE

Engineered to keep you working longer, SANY excavators are designed with easy-access service doors, clearly positioned maintenance points, and extended service intervals to reduce downtime and simplify routine checks. High-quality, proven components used throughout the range enhance durability and long-term reliability, supporting consistent performance shift after shift.



MAINTENANCE MADE EASY

SANY mini excavators are engineered for streamlined service and maintenance, with design features that make routine upkeep faster and more efficient.

A wide-opening engine door provides ground-level access to all key service points, ensuring that daily checks are quick, simple, and easy to perform.

ROBUST STRUCTURES

Integrated guarding for the dozer blade and hydraulic cylinders provides robust protection against on-site impacts, minimising the risk of component damage, unplanned downtime, and expensive repair work.

Steel bodywork delivers long-lasting durability and protection against onsite damage, helping minimise repair costs and reduce overall cost of ownership.

COMMON, PREMIUM COMPONENTS

Produced in advanced manufacturing facilities in China, SANY excavators are built for high quality and lasting durability, utilising high-spec components from reputable global manufacturers.

Shared componentry across the range, combined with an extensive European dealer network, ensures rapid response and efficient turnaround for any machine repair.





INCREASED WORKING HOURS

With 500 hour service intervals, maintenance frequency is reduced, lowering operating costs and improving machine availability.

SANY EVI telematics provides real-time alerts relating to machine health thanks to remote fault diagnostics and maintenance scheduling that can help to extend the life of your machine.

SY16C / SY18C / SY18U

ATTACHMENTS

SANY machines offer extended capability through a broad selection of easily interchangeable attachments. This range enables efficient performance across varied tasks such as digging, drilling, land clearing, material handling, and demolition.

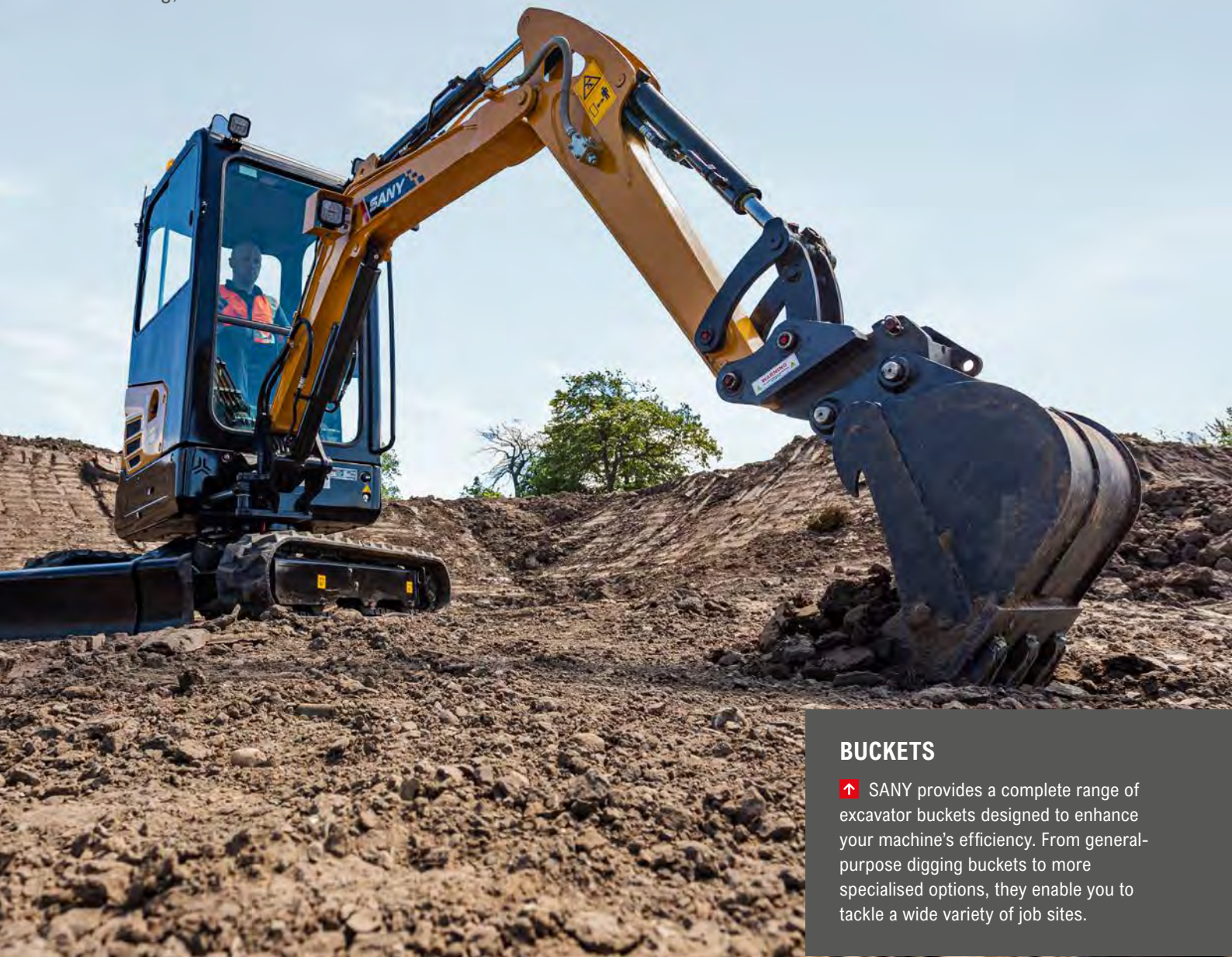

BUCKETS

SANY provides a complete range of excavator buckets designed to enhance your machine's efficiency. From general-purpose digging buckets to more specialised options, they enable you to tackle a wide variety of job sites.

QUICK HITCH

Equipped with quick hitches as standard, SANY machines enable rapid attachment changes, helping you get more done in less time. By reducing manual labour and ensuring a secure fit, they expand the machine's versatility and keep your operations running smoothly.

BREAKERS

SANY breakers have been designed to deliver powerful breaking performance, long-lasting durability, and high efficiency. They are suitable for a wide range of applications such as quarry, tunneling, civil construction, trenching, road & landscaping etc.

GRABS

SANY excavator grabs deliver powerful, reliable material handling with high clamping force, smooth hydraulic control and durable steel construction. The result is a cost-effective, high-performance attachment that boosts productivity and control on every job.*

*SANY attachment options may vary depending on country.

SY16C / SY18C / SY18U

YOUR UPTIME. OUR PRIORITY.

Rely on SANY's value-added aftermarket services to keep your equipment operating at peak efficiency. From proactive maintenance to reducing unexpected downtime and controlling operating costs, we provide the support your business depends on. Our European service solutions further boost performance, streamline maintenance tasks, and improve profitability across your fleet.

5 YEAR WARRANTY

Built on a global reputation for reliability and durability, SANY excavators come with an unmatched 5-year warranty* – one of the strongest in the industry.

It's a clear statement of the confidence we have in our machines and our commitment to your uptime. Your investment is protected from day one, giving you the assurance that if an issue arises, you're fully covered.

*Terms and conditions apply.

SERVICE AND SUPPORT

SANY's extensive network of certified technicians and dealer partners provides on-site service and technical expertise designed to minimise downtime and maintain peak machine performance.

Working in coordination with our advanced manufacturing facilities in China, our European teams combine global engineering capability with practical local support.

SANY GENUINE PARTS

SANY genuine parts are engineered, rigorously tested, and manufactured to the exact specifications required by your machine. Their precise fit and compatibility guarantee maximum performance and system integrity.

By maintaining correct operational tolerances, they enhance on-site safety and significantly reduce the risk of unplanned failures or downtime. All genuine parts are supported by a 12-month warranty for added assurance.





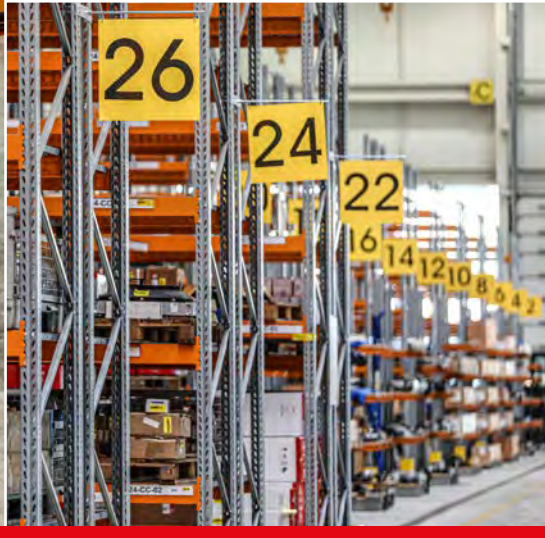

SY16C / SY18C / SY18U

INTELLIGENT SUPPORT

SANY's connected tools give you clarity, confidence, and control on every project. ROOTPILOT brings precision to the bucket; EVI Telematics brings visibility to the fleet. Together, they reduce downtime, cut costs, and boost productivity. Smart technology – driving your success.



EVI e.vision

Designed exclusively for Europe, our digital fleet management system EVI gives you complete visibility of your machines whenever and wherever you need it. By simplifying fleet oversight, it enables better decision-making, lowers costs, and improves uptime across your operations. With built-in safety and security features that let you monitor location and usage in real time, you gain greater control and peace of mind.

Key benefits include:

- Enhanced fleet visibility and remote machine management
- Set authorised operating hours and create geofenced security zones to reduce theft risk and misuse
- Greater visibility of routine checks and machine health
- Multi-channel, real-time communication for faster decision-making
- Operating report analysis for smarter, data-led decision-making
- Customer account management for personalised, data-backed communication

SANY ROOTPILOT

SANY ROOTPILOT is a high-precision 3D machine-control system that uses GNSS, IMU sensors, and smart algorithms to guide excavators in real time. It gives operators clear, intuitive 3D feedback for faster, safer, and more accurate digging.

ROOTPILOT installs quickly, works with multiple machines and attachments, and syncs designs through the cloud so every operator works from the same plan. It's ideal for highways, municipal works, and foundation projects where precision is critical.

Available in Fundamental and Premium versions, ROOTPILOT supports everything from basic grading to full 3D model guidance, offsets, layer control, and complex digital designs.

Main customer benefits:

- ±3 cm accuracy for first-time-right excavation
- Avoidance of underground utilities and hazards
- Lower fuel, labour, and rework costs
- Faster production with fewer survey checks
- Works with 2D or full 3D design models
- Boosts operator confidence and consistency

SY16C / SY18C / SY18U

SPECIFICATION

ENGINE

	SY16C	SY18C	SY18U
Model	Yanmar 3TNV80F	Yanmar 3TNV80F	Yanmar 3TNV80F
Type	Inline, Water-cooled, 4 Cycle, Naturally Aspirated	Inline, Water-cooled, 4 Cycle, Naturally Aspirated	Inline, Water-cooled, 4 Cycle, Naturally Aspirated
Exhaust emissions	Stage V	Stage V	Stage V
Rated power	14.6 / 2,400 rpm	14.6 / 2,400 rpm	14.6 / 2,400 rpm
Max. torque	65.3 Nm @ 1,800 rpm	65.3 Nm @ 1,800 rpm	65.3 Nm @ 1,800 rpm
Displacement	1,267 cm³	1,267 cm³	1,267 cm³

HYDRAULIC SYSTEM

	SY16C	SY18C	SY18U
Main pump	Variable displacement axial piston pump	Variable displacement axial piston pump	Variable displacement axial piston pump
Max. oil flow	72 l/min	72 l/min	66 l/min
Travel motor	Variable displacement axial piston motor	Variable displacement axial piston motor	Variable displacement axial piston motor
Swing motor	Axial piston motor	Axial piston motor	Axial piston motor
Max. oil flow (AUX 1)	40 l/min	40 l/min	40 l/min

PERFORMANCE

	SY16C	SY18C	SY18U
Swing speed	10 rpm	10 rpm	10 rpm
Max. travel speed	2.7 km/h	2.7 km/h	3.0 km/h
Max. travel force	15.6 kN	15.6 kN	16.2 kN
Gradeability	58%/30°	58%/30°	58%/30°
Bucket capacity	0.04 m³	0.04 m³	0.04 m³
Ground pressure	29.4 kPa	30 kPa	30 kPa
Bucket digging force (ISO)	15.2 kN	15.2 kN	16.6 kN
Arm digging force (ISO)	9.2 kN	9.2 kN	9.2 kN

SERVICE REFILL CAPACITIES

	SY16C	SY18C	SY18U
Fuel tank	20 l	20 l	21 l
Engine coolant	5.0 l	5.4 l	5.4 l
Engine oil	3.4 l	3.4 l	3.4 l
Drive (per side)	0.33 l	0.33 l	0.33 l
Hydraulic oil tank	21 l	21 l	21 l

Based on theoretical calculation at max flow with no load.

Subject to alterations.

In the interest of continual equipment development, SANY reserves the right to change these specifications at any time without prior notification.

OPERATING WEIGHT

	SY16C	SY18C	SY18U
Includes 75kg (165 lb) operator, full fuel tank and excludes any attachments or hitch	1865 kg	1910 kg	1925 kg

UNDERCARRRIAGE & UPPER STRUCTURE

	SY16C	SY18C	SY18U
Boom length	1,810 mm	1,810 mm	1,770 mm
Arm length	1,130 mm	1,130 mm	960 / 1,160 mm (Opt)
Bottom rollers	3	3	3
Rotation device	Axial piston motor, planetary gear, singlerow slewing ring, hydraulic parking brake.	Axial piston motor, planetary gear, singlerow slewing ring, hydraulic parking brake.	Axial piston motor, planetary gear, singlerow slewing ring, hydraulic parking brake.
Undercarriage	Reinforced undercarriage. Welded drive frame.	Reinforced undercarriage. Welded drive frame.	Reinforced undercarriage. Welded drive frame.

PERFORMANCE

	SY16C	SY18C	SY18U
Implement circuit	27 MPa	27 MPa	24.5 MPa
Swing circuit	16.2 MPa	16.2 MPa	18.6 MPa
Travel circuit	24.5 MPa	24.5 MPa	24 MPa
Pilot pressure	3.5 MPa	3.5 MPa	3.5 MPa

SOUND LEVEL

	SY16C	SY18C	SY18U
Noise level inside cabin	78 dB(A)	78 dB(A)	78 dB(A)
Noise guaranteed value	93 dB(A)	93 dB(A)	93 dB(A)

SY16C / SY18C / SY18U

SPECIFICATION

SY16C LIFTING CAPACITIES - DOZER BLADE DOWN

Load Point Height (B)		Radius (A) 1.5 m		2.0 m		2.5 m		3.0 m		Digging Reach Max	
3.0 m	kg									*380	*380
2.0 m	kg					*360	*360	*368	340	*313	299
1.0 m	kg			*652	596	*501	429	*430	328	*314	262
Ground line	kg	*821	*821	*858	560	*619	407	*487	317	*365	270
–1.0 m	kg	*999	887	*766	559	*557	406			*430	342

SY16C LIFTING CAPACITIES - DOZER BLADE UP

Load Point Height (B)		Radius (A) 1.5 m		2.0 m		2.5 m		3.0 m		Digging Reach Max	
3.0 m	kg									*380	*380
2.0 m	kg					*360	*360	325	340	286	299
1.0 m	kg			573	596	410	429	313	328	249	262
Ground line	kg	*821	*821	537	560	389	407	301	317	257	270
–1.0 m	kg	857	887	536	559	388	406			326	342

SY18C LIFTING CAPACITIES - DOZER BLADE DOWN

Load Point Height (B)		Radius (A) 1.5 m		2.0 m		2.5 m		3.0 m		Digging Reach Max	
3.0 m	kg									*380	*380
2.0 m	kg					*360	*360	*368	344	*313	303
1.0 m	kg			*652	602	*501	433	*430	332	*314	265
Ground line	kg	*821	*821	* 858	566	*619	412	*487	320	*365	273
–1.0 m	kg	*999	897	*766	566	*557	411			*430	347

SY18C LIFTING CAPACITIES - DOZER BLADE UP

Load Point Height (B)		Radius (A) 1.5 m		2.0 m		2.5 m		3.0 m		Digging Reach Max	
3.0 m	kg									*380	*380
2.0 m	kg					*360	*360	330	344	290	303
1.0 m	kg			581	602	417	433	318	332	253	265
Ground line	kg	*821	*821	545	566	395	412	306	320	261	273
–1.0 m	kg	869	897	544	566	394	411			332	347

SY18U LIFTING CAPACITIES - DOZER BLADE DOWN

Load Point Height (B)		Radius (A) 1.5 m		2.0 m		2.5 m		3.0 m		Digging Reach Max	
3.0 m	kg									*265	*265
2.0 m	kg							*292	263	*255	225
1.0 m	kg			*517	461	*415	333	*366	255	*256	193
Ground line	kg	*662	*651	*774	425	*541	313	*414	245	*298	193
–1.0 m	kg	*999	*660	*650	422	*468	309	*342	243	*312	232

SY18U LIFTING CAPACITIES - DOZER BLADE UP

Load Point Height (B)		Radius (A) 1.5 m		2.0 m		2.5 m		3.0 m		Digging Reach Max	
3.0 m	kg									*265	*265
2.0 m	kg							260	263	222	225
1.0 m	kg			462	461	331	333	253	255	190	193
Ground line	kg	*662	*651	425	425	311	313	242	245	190	193
–1.0 m	kg	*671	*660	423	422	307	309	240	243	229	232

1. This capability is calculated according to GB/T 13331, ISO10567 standards. The limiting coefficient of the hydraulic system is 0.87, and the tipping coefficient is 0.75.
2. Marked with * is limited by hydraulic pressure, marked without * is limited by stability.
3. The lifting point is the support hole in front of the bucket rod (excluding the weight of the bucket). If there are additional accessories such as buckets, they should be deducted from the above lifting weight.
4. A- Radius of loading point (m), B- Loading point height (m).

SY16C / SY18C / SY18U

SPECIFICATION

DIMENSIONS (TRANSPORT)

		SY16C	SY18C	SY18U 960mm Arm	SY18U 1160mm Arm
A	Transport length	3,665 mm	3,665 mm	3,515 mm	3,515 mm
B	Transport width	980 - 1,350 mm	980 - 1,350 mm	980 - 1,350 mm	980 - 1,350 mm
C	Height over cabin / ROPS	2,410 mm	2,410 mm	2,370 mm	2,370 mm
D	Cab width	980 mm	1,030 mm	980 mm	980 mm
E	Blade height	265 mm	265 mm	265 mm	265 mm
F	Track width	230 mm	230 mm	230 mm	230 mm
G	Track gauge	750 - 1,220 mm	750 - 1,220 mm	750 - 1,220 mm	750 - 1,220 mm
H	Min. ground clearance	150 mm	150 mm	150 mm	150 mm
I	Tail swing radius	920 mm	920 mm	675 mm	675 mm
J	Track ground length	1,220 mm	1,220 mm	1,220 mm	1,220 mm
K	Track length	1,585 mm	1,585 mm	1,585 mm	1,585 mm
L	Track height	375 mm	375 mm	375 mm	375 mm
M	Counterweight clearance	460 mm	460 mm	455 mm	455 mm
N	Horizontal distance to blade	1,200 mm	1,200 mm	1,200 mm	1,200 mm
O	Engine cover height	1,275 mm	1,275 mm	1,345 mm	1,345 mm
	Height of boom – transport	1,325 mm	1,325 mm	1,125 mm	1,125 mm
	Undercarriage width (blade)	980 - 1,350 mm	980 - 1,350 mm	980 - 1,350 mm	980 - 1,350 mm

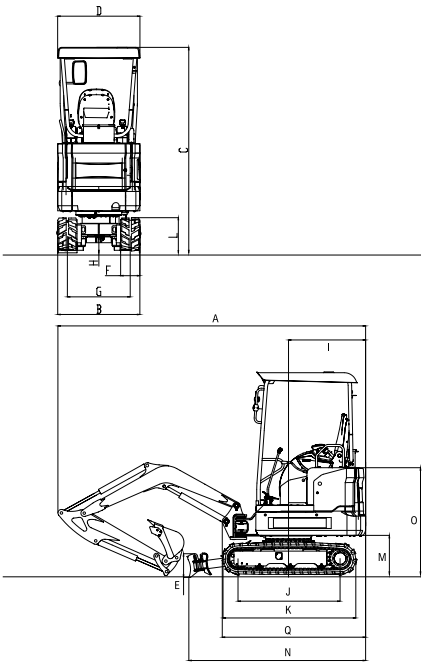

WORKING AREA

		SY16C	SY18C	SY18U 960mm Arm	SY18U 1160mm Arm
A	Max. digging height	3,665 mm	3,665 mm	3,410 mm	3,530 mm
B	Max. dumping height	2,635 mm	2,635 mm	2,350 mm	2,475 mm
	Min. dumping height	1,205 mm	1,205 mm	785 mm	585 mm
C	Max. digging depth	2,360 mm	2,360 mm	2,385 mm	2,585 mm
D	Max. vertical digging depth	2,215 mm	2,215 mm	2,100 mm	2,205 mm
E	Max. digging reach	4,000 mm	4,000 mm	4,010 mm	4,135 mm
F	Min. swing radius	1,655 mm	1,655 mm	1,705 mm	1,715 mm
	Swing radius (L boom swing)	1,490 mm	1,490 mm	1,290 mm	1,300 mm
	Swing radius (R boom swing)	1,510 mm	1,510 mm	1,640 mm	1,650 mm
G	Maximum height at minimum swing radius	2,745 mm	2,745 mm	2,550 mm	2,545 mm
H	Max. clearance with blade up	290 mm	290 mm	290 mm	290 mm
I	Max. blade digging depth (blade down)	375 mm	375 mm	375 mm	375 mm
	Offset boom (L)	595 mm	595 mm	625 mm	625 mm
	Offset boom (R)	350 mm	350 mm	400 mm	400 mm
	Max. boom swing angle (L)	46 °	46 °	58 °	58 °
	Max. boom swing angle (R)	73 °	73 °	51 °	51 °
	Arm head distance with work equipment fully retracted	1,230 mm	1,230 mm	1,430 mm	1,430 mm

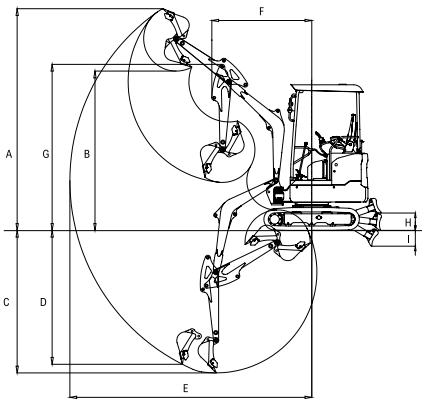

SY16C / SY18C / SY18U

STANDARD/OPTIONAL EQUIPMENT

OPERATORS COMFORT / CAB

	SY16C	SY18C	SY18U
High-back seat	•	•	
Mechancial suspension seat			•
Heater		•	
Bluetooth radio & speaker		•	
Adjustable armrests	•	•	•
12V outlets	•	•	•
Wiper		•	
Up and over window		•	

WORKING LIGHTS

	SY16C	SY18C	SY18U
Lights x 2 – front (LED)	•	•	•
Lights x 1 – boom (LED)	•	•	•
Magnetic beacon	•	•	•

UNDERCARRIAGE

	SY16C	SY18C	SY18U
Rubber tracks (230 mm)	•	•	•
Holes / loops for fixing	•	•	•
Width adjustable undercarriage 980 - 1,350 mm)	•	•	•

ENGINE

	SY16C	SY18C	SY18U
Diesel filter	•	•	•
Air filter	•	•	•
Air filter guard	•	•	•

SAFETY

	SY16C	SY18C	SY18U
ROPS, TOPS and FOPS cab		•	
ROPS, TOPS and FOPS canopy	•		•
Battery master switch	•	•	•
Travel alarm	•	•	•
Emergency stop button	•	•	•
Retractable seatbelt	•	•	•
Seatbelt alarm	OPT	OPT	OPT
Lockable bonnet	•	•	•
Lockable fuel cap	•	•	•
All-round mirrors	•	•	•
EVI telematics	•	•	•

WORKING EQUIPMENT

	SY16C	SY18C	SY18U
Double acting circuit for hydraulic quick coupler with piping			OPT
Breaker & shear line proportional with piping	•	•	•
Rotation line proportional on joystick with piping			OPT
Flow adjustment for attachments	•	•	•
960 mm Arm			•
1130 mm Arm	•	•	
1160 mm Arm			OPT

HYDRAULIC SYSTEM

	SY16C	SY18C	SY18U
Swing brake	•	•	•
2 speed travel	•	•	•
Piping for auxilliary control circuit 1	•	•	•
Main filter	•	•	•

The standard and optional equipment can differ depending on the country in which the machine is delivered. Please contact your local dealer for more information.

SANY



SANY HEAVY MACHINERY (UK) LTD
Unit 6, M8 Interlink Estate,
Coatbridge, Glasgow, ML5 4RP
Tel: 0330 2021 318
Email: info@sanyuk.com

Sanyuk.com

Not all products are available in all markets. As part of our continuous improvement process, we reserve the right to modify specifications and designs without giving prior notice. Machines shown may feature additional options other than the standard machine specification.

HEX - SY16C / SY18C / SY18U - 03 - 2026 - EU - V1