SY10U

MICRO EXCAVATOR

Max. Gross Power	Operating Weight	Max. Dig Depth
8.8 kW / 2,200 rpm	1,195 kg	1,868 mm



SANY:

QUALITY CHANGES THE WORLD

Founded in 1989, SANY has grown into one of the world's largest construction equipment manufacturers, with global R&D and production – including European facilities – and machines working in 150+ countries. Our range spans excavators, road and port machinery, and cranes, built with proven manufacturing heritage and modern quality systems.

A GLOBAL LEADER BEHIND EVERY RANGE

From compact excavators to high-tonnage earthmovers, cranes, telehandlers, concrete machinery, road equipment and more, SANY's worldwide product range reflects decades of innovation, investment, and real-world experience.

This broad international range is proven on job sites in over 150 countries, ensuring every machine delivered to Europe is backed by extensive testing, real-world performance and the strength of a global supply chain.

ENGINEERED FOR OUR EUROPEAN CUSTOMERS

Every SANY machine destined for Europe is engineered to meet European regulations and real-world use cases – from CE and Stage V compliance to region-specific specifications and options.

For European construction customers, this worldwide capability translates directly into trust. SANY selects and engineers its product line specifically for local requirements, combining global innovation with European-quality standards, dealer support and service.

GLOBAL MANUFACTURING EXCELLENCE

SANY's long-standing commitment to quality and innovation – supported by advanced intelligent manufacturing and a sustained 5-7% of annual revenue reinvested into R&D – results in machines that deliver reliability, efficiency, and consistent performance on site.

With state-of-the-art production facilities and rigorous global testing standards, every machine is built to withstand demanding conditions and deliver long-term value.




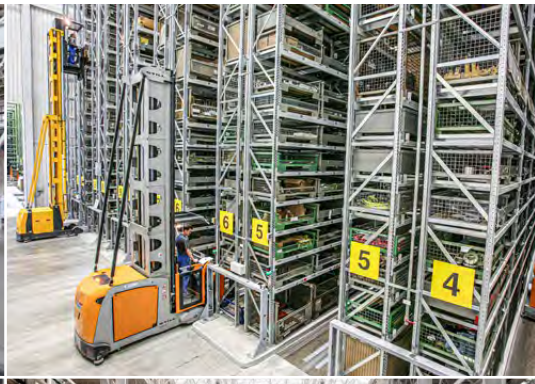




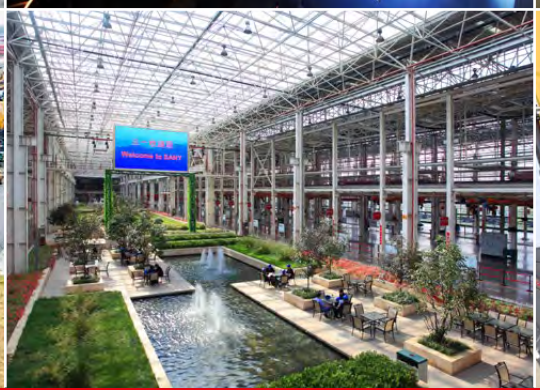


INTRODUCING THE

SY10U

The SY10U micro excavator is built to access the jobs other machines simply cannot reach. With ultra-compact dimensions and a lightweight design, it's narrow enough to pass through tight access points and passageways, making it ideal for confined or restricted job sites. Powered by a reliable Stage V Kubota engine and supported by load-sensing hydraulics, the SY10U delivers responsive performance while helping reduce fuel consumption and operating costs.

The swing boom further improves productivity in limited spaces, allowing operators to work efficiently without constantly repositioning the machine. The result is faster setup, greater versatility and the ability to complete more work in challenging environments.



WHY CHOOSE SANY MICRO EXCAVATORS

WORLD RENOWNED COMPONENTS

SANY uses proven, top-tier components to deliver long-lasting reliability – meaning you benefit from fewer breakdowns, longer service life, and lower ownership costs.

GREAT VALUE, UNCOMPROMISED QUALITY

You can have confidence in your return on investment. SANY micro excavators are loaded with the latest innovations to help reduce costs, increase productivity and protect resale value.

INDUSTRY LEADING 5 YEAR WARRANTY

Built to last – and backed by an industry-leading warranty – giving you lower risk, predictable costs, and confidence on every job.

LOW OPERATING COSTS

Simple engineering, readily available parts, and low fuel consumption reduce ongoing running costs – a major advantage in Europe's high-cost markets.

LOCAL SUPPORT

Europe-wide expert dealers and value-added aftermarket support keep your machine running, minimise downtime, and simplify ownership.

STANDARD ADVANCED FEATURES

SANY excavators include all essential features as standard – no costly add-ons or custom tweaks required.

SY10U

PRODUCTIVITY

The SY10U micro excavator delivers productivity where it matters most. Its ultra-compact design and zero tail swing allows operators to access tight job sites and restricted spaces with ease, while versatile attachment capability ensures the machine can adapt quickly to a wide range of tasks. Efficient load-sensing hydraulics provide smooth, responsive performance, helping operators work faster, switch attachments easily and maximise productivity on every job site.



COMPACT DIMENSIONS

With its lightweight build, compact footprint and foldable canopy the SY10U micro excavator can reach restricted job sites and narrow access areas that larger machines cannot, increasing versatility and saving valuable time on every job.

SANY's swing boom design lets you offset the boom so you can dig alongside walls and in tight spaces without rotating/repositioning the machine, reducing ground disturbance.

HYDRAULICS DESIGNED FOR PRODUCTIVITY

SANY's load-sensing twin auxiliary hydraulics as standard allow you to operate a wider range of attachments with powered movement in both directions, giving you reversible control and faster task changes.

SANY‘s hydraulic quick hitch enables in-cab attachment changes within seconds, eliminating manual pin removal, reducing exposure to pinch points, and minimising downtime between tasks.

VERSATILE OPERATION

The SY10U comes factory-equipped for seamless attachment integration, making it ready to work with common tools such as breakers, grapples, tilt buckets and augers straight from day one.

With an expanding undercarriage (745 mm up to 1100 mm) and an adjustable dozer blade, the SANY SY10U delivers greater stability and enhanced on-site versatility, helping operators work more confidently and efficiently in varying ground conditions.

Integrated tie-down points on the track frame and dozer blade simplify secure trailering, cutting loading time, improving load restraint compliance, and reducing risk of damage during transport.



SY10U

EFFICIENCY

The SY10U micro excavator is designed to deliver efficient performance on every job. Powered by a reliable Stage V Kubota engine and supported by intelligent hydraulic management, it provides the power operators need while keeping fuel consumption and operating costs under control.



CONSUMING LESS, STORING MORE

Powered by a Stage V Kubota engine, the SY10U delivers 8.8 kW of high-performance power at 2,200 rpm and efficient operation, helping reduce fuel costs while maintaining strong productivity on every job.

EFFICIENT OPERATION

SANY's two-speed tracking lets the operator choose high or low travel to match terrain and task reducing unnecessary revs and therefore fuel usage.

The SY10U's ultra-lightweight design maximises efficiency by reducing power demand, helping lower fuel consumption and operating costs.

ENERGY-EFFICIENT HYDRAULICS

SANY's load-sensing hydraulics deliver only the flow and pressure the working circuits need, so the system wastes less energy and burns less fuel.

A well-matched engine and hydraulic system measures pump output to demand, reducing wasted flow and fuel resulting in lower running costs for the customer.



SY10U

OPERATOR ENVIRONMENT

Designed to keep operators comfortable, aware and in control throughout the working day, the SY10U micro excavator features an ergonomic operating environment, smooth and responsive controls, and reduced noise and vibration to help minimise fatigue while supporting precise machine control.



PREMIUM COMFORT

The ergonomic operator's high back suspension seat provides lasting comfort, helping reduce fatigue and enabling operators to stay focused and efficient for longer.

The quiet, low-vibration engine reduces noise and vibration levels to a minimum, creating a more comfortable operating environment and allowing the machine to work effectively in noise-sensitive areas.

JOB SITE AWARENESS

The SY10U's open layout and slim profile provide excellent sightlines to the work area, helping operators work safely and precisely, even in tight spaces.

EVERYDAY EASE

Clear instrumentation and colour display make machine operation easier and more intuitive, helping operators work with confidence and precision.

Highly responsive and precise controls allow smooth, accurate operation, helping operators work more efficiently and maintain productivity throughout the job.

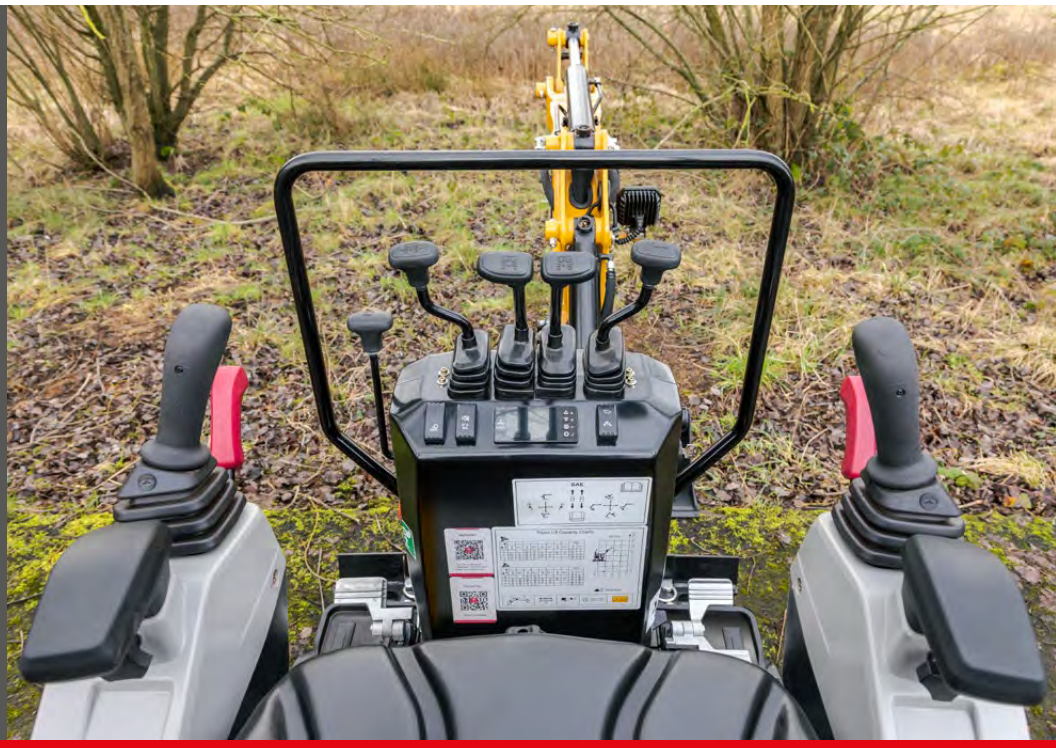

SY10U

SAFETY & SECURITY

Built with durability and operator protection at its core, SANY's micro excavator combines heavy-duty structural design with integrated stability and safety systems suited to tough working conditions. Optimised visibility, robust construction, and intelligently placed safety features work together to improve site awareness, helping operators work with greater confidence, control, and reduced risk in demanding environments.



PROTECTING BYSTANDERS

An energy efficient LED work light is positioned on the boom for maximum versatility in poor or low light conditions.

A travel alarm and rotating warning beacon help to increase visibility, attract attention and ensure safety on site.

EMERGENCY SHUTDOWN

Featuring both a battery disconnect switch and an emergency stop button, the system allows immediate power isolation to enhance operator and site safety.

STRUCTURAL INTEGRITY

The SY10U's ROPS-certified foldable canopy provides robust operator protection, helping ensure safe and confident operation on demanding job sites.

Heavy-duty steel bodywork provides robust protection against on-site damage, safeguarding vital structures and contributing to reduced lifetime ownership costs.

ADVANCED SECURITY

Lockable service doors protect critical components and fuel systems, preventing unauthorised access and enhancing site security.

Backed by the CESAR Datatag Scheme for proven theft deterrence and equipped with CESAR ECV, these machines allow swift and dependable verification of emissions category.

Advanced anti-theft EVI telematics employ GPS tracking and configurable geofencing to safeguard the machine from theft and unauthorised use.

The integrated PIN code immobiliser helps protect your investment by preventing unauthorised use of the machine. Simple to operate via the high-resolution colour display, it ensures only approved operators can start the SY10U, enhancing both on-site security and peace of mind.

EVI e.vision

SY10U

SERVICE & MAINTENANCE

Engineered to keep you working longer, SANY excavators are designed with easy-access service doors, clearly positioned maintenance points, and extended service intervals to reduce downtime and simplify routine checks. High-quality, proven components used throughout the range enhance durability and long-term reliability, supporting consistent performance shift after shift.



MAINTENANCE MADE EASY

The SY10U micro excavator is engineered for streamlined service and maintenance, with design features that make routine upkeep faster and more efficient.

A wide-opening engine door provides ground-level access to all key service points, ensuring that daily checks are quick, simple, and easy to perform.

ROBUST STRUCTURES

Dozer blade and cylinder guarding help protect key components from damage during operation, reducing the risk of downtime and costly repairs.

Steel bodywork delivers long-lasting durability and protection against onsite damage, helping minimise repair costs and reduce overall cost of ownership.

COMMON, PREMIUM COMPONENTS

Produced in advanced manufacturing facilities in China, SANY excavators are built for high quality and lasting durability, utilising high-spec components from reputable global manufacturers.

Shared componentry across the range, combined with an extensive European dealer network, ensures rapid response and efficient turnaround for any machine repair.

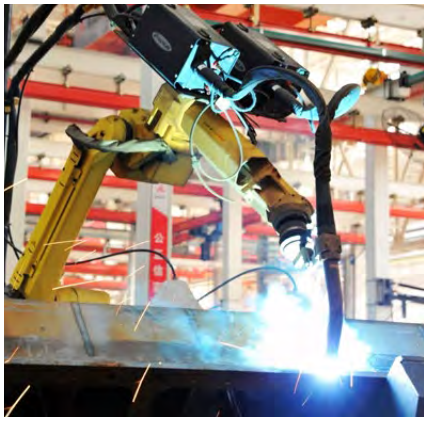



INCREASED WORKING HOURS

With 500 hour service intervals, maintenance frequency is reduced, lowering operating costs and improving machine availability.

SANY EVI telematics provides real-time alerts relating to machine health thanks to remote fault diagnostics and maintenance scheduling that can help to extend the life of your machine.

SY10U

ATTACHMENTS

SANY machines offer extended capability through a broad selection of easily interchangeable attachments. This range enables efficient performance across varied tasks such as digging, drilling, land clearing, material handling, and demolition.



BUCKETS

SANY provides a complete range of excavator buckets designed to enhance your machine's efficiency. From general-purpose digging buckets to more specialised options, they enable you to tackle a wide variety of job sites.

QUICK HITCH

Equipped with quick hitches as standard, SANY machines enable rapid attachment changes, helping you get more done in less time. By reducing manual labour and ensuring a secure fit, they expand the machine's versatility and keep your operations running smoothly.

BREAKERS

SANY breakers have been designed to deliver powerful breaking performance, long-lasting durability, and high efficiency. They are suitable for a wide range of applications such as quarry, tunneling, civil construction, trenching, road & landscaping etc.

GRABS

SANY excavator grabs deliver powerful, reliable material handling with high clamping force, smooth hydraulic control and durable steel construction. The result is a cost-effective, high-performance attachment that boosts productivity and control on every job.*

*SANY attachment options may vary depending on country.

SY10U

YOUR UPTIME. OUR PRIORITY.

Rely on SANY's value-added aftermarket services to keep your equipment operating at peak efficiency. From proactive maintenance to reducing unexpected downtime and controlling operating costs, we provide the support your business depends on. Our European service solutions further boost performance, streamline maintenance tasks, and improve profitability across your fleet.

5 YEAR WARRANTY

Built on a global reputation for reliability and durability, SANY excavators come with an unmatched 5-year warranty* – one of the strongest in the industry.

It's a clear statement of the confidence we have in our machines and our commitment to your uptime. Your investment is protected from day one, giving you the assurance that if an issue arises, you're fully covered.

*Terms and conditions apply.

SERVICE AND SUPPORT

SANY's extensive network of certified technicians and dealer partners provides on-site service and technical expertise designed to minimise downtime and maintain peak machine performance.

Working in coordination with our advanced manufacturing facilities in China, our European teams combine global engineering capability with practical local support.

SANY GENUINE PARTS

SANY genuine parts are engineered, rigorously tested, and manufactured to the exact specifications required by your machine. Their precise fit and compatibility guarantee maximum performance and system integrity.

By maintaining correct operational tolerances, they enhance on-site safety and significantly reduce the risk of unplanned failures or downtime. All genuine parts are supported by a 12-month warranty for added assurance.





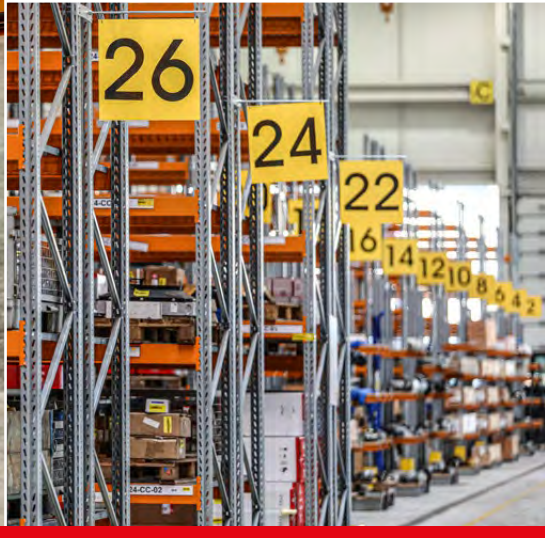

SY10U

INTELLIGENT SUPPORT

SANY's connected tools give you clarity, confidence, and control on every project. ROOTPILOT brings precision to the bucket; EVI Telematics brings visibility to the fleet. Together, they reduce downtime, cut costs, and boost productivity. Smart technology – driving your success.



EVI e.vision

Designed exclusively for Europe, our digital fleet management system EVI gives you complete visibility of your machines whenever and wherever you need it. By simplifying fleet oversight, it enables better decision-making, lowers costs, and improves uptime across your operations. With built-in safety and security features that let you monitor location and usage in real time, you gain greater control and peace of mind.

Key benefits include:

- Enhanced fleet visibility and remote machine management
- Set authorised operating hours and create geofenced security zones to reduce theft risk and misuse
- Greater visibility of routine checks and machine health
- Multi-channel, real-time communication for faster decision-making
- Operating report analysis for smarter, data-led decision-making
- Customer account management for personalised, data-backed communication

SANY ROOTPILOT

SANY ROOTPILOT is a high-precision 3D machine-control system that uses GNSS, IMU sensors, and smart algorithms to guide excavators in real time. It gives operators clear, intuitive 3D feedback for faster, safer, and more accurate digging.

ROOTPILOT installs quickly, works with multiple machines and attachments, and syncs designs through the cloud so every operator works from the same plan. It's ideal for highways, municipal works, and foundation projects where precision is critical.

Available in Fundamental and Premium versions, ROOTPILOT supports everything from basic grading to full 3D model guidance, offsets, layer control, and complex digital designs.

Main customer benefits:

- ±3 cm accuracy for first-time-right excavation
- Avoidance of underground utilities and hazards
- Lower fuel, labour, and rework costs
- Faster production with fewer survey checks
- Works with 2D or full 3D design models
- Boosts operator confidence and consistency

SY10U

SPECIFICATION

ENGINE

Model	KUBOTA D722
Type	Inline, Water-cooled, 4 Cycle, Naturally Aspirated
Exhaust emissions	Stage V
Rated power	8.8 Kw @ 2,200 rpm
Max. torque	36.9 Nm @ 1,900 rpm
Displacement	719 cc

HYDRAULIC SYSTEM

Main pump	Variable displacement axial piston pump
Max. oil flow	40 l/min
Travel motor	Variable displacement axial piston motor
Swing motor	Gerotor Motor
Max. oil flow (AUX 1)	40 l/min

PERFORMANCE

Swing speed	10 rpm
Max. travel speed	High 3.4 km/h
Max. travel force	8.8 kN
Gradeability	58%/30°
Bucket capacity	0.025 m³
Ground pressure	28.5 kPa
Bucket digging force (ISO)	12.9 kN
Arm digging force (ISO)	6.9 kN

SERVICE REFILL CAPACITIES

Fuel tank	13 l
Engine coolant	3.5 l
Engine oil	3.8 l
Drive (per side)	0.33 l
Hydraulic oil tank	11 l

Based on theoretical calculation at max flow with no load.

Subject to alterations.

In the interest of continual equipment development, SANY reserves the right to change these specifications at any time without prior notification.

OPERATING WEIGHT

1,195 kg

Note: Includes 75kg (165 lb) operator, full fuel tank and excludes any attachments or hitch.

UNDER & UPPER STRUCTURE

Boom length	1,460 mm
Arm length	890 mm
Bottom rollers	3
Rotation device	Gerotor Motor, planetary gear, single row slewing ring.
Undercarriage	Reinforced undercarriage. Welded drive frame.

RELIEF VALVE SETTINGS

Implement circuit	25 MPa
Swing circuit	12 MPa
Travel circuit	20.6 MPa
Pilot pressure	3.5 MPa

SOUND LEVEL

Noise level inside cabin	75 dB(A)
Noise guaranteed value	92 dB(A)

SY10U

SPECIFICATION

LIFTING CAPACITIES - DOZER BLADE UP

Load Point Height (B)	Radius (A) 1.5 m		2.0 m		2.5 m		3.0 m		Digging Reach Max	
2.5 m kg									268	*286
2.0 m kg			*221	*221					171	187
1.5 m kg			238	*244	165	180			139	152
1.0 m kg	359	392	228	249	161	176			124	137
0.5 m kg			236	236	155	170			119	131
Ground line kg	313	346	206	227	151	166			121	133
–0.5 m kg	312	345	203	224	149	164			132	145
–1.0 m kg	316	349	205	225					160	*162

LIFTING CAPACITIES - DOZER BLADE DOWN

Load Point Height (B)	Radius (A) 1.5 m		2.0 m		2.5 m		3.0 m		Digging Reach Max	
2.5 m kg									*286	*286
2.0 m kg			*221	*221					*256	187
1.5 m kg			*244	*244	*245	180			*234	152
1.0 m kg	*429	392	*317	249	*260	176			*216	137
0.5 m kg			*373	236	*271	170			*200	131
Ground line kg	*545	346	*369	227	*260	166			*187	133
–0.5 m kg	*480	345	*322	224	*222	164			*174	145
–1.0 m kg	*371	349	*246	225					*162	*162

1. This capability is calculated according to GB/T 13331, ISO10567 standards. The limiting coefficient of the hydraulic system is 0.87, and the tipping coefficient is 0.75.
2. Marked with * is limited by hydraulic pressure, marked without * is limited by stability.
3. The lifting point is the support hole in front of the bucket rod (excluding the weight of the bucket). If there are additional accessories such as buckets, they should be deducted from the above lifting weight.
4. A- Radius of loading point (m), B- Loading point height (m).

SY10U

SPECIFICATION

DIMENSIONS (TRANSPORT)

A	Transport length	3,018 mm
B	Transport width (adjustable)	745 - 1,100 mm
C	Height over canopy / ROPS	2,290 mm
D	Canopy width	745 mm
E	Blade height	220 mm
F	Track width	180 mm
G	Track gauge (adjustable)	564 - 919 mm
H	Min. ground clearance	145 mm
I	Tail swing radius	550 mm
J	Track ground length	1,041 mm
K	Track length	1,353 mm
L	Track height	315 mm
M	Counterweight clearance	385 mm
N	Undercarriage width (blade)	745 - 1,100 mm
O	Horizontal distance to blade	1,015 mm
P	Engine cover height	1, 070 mm
	Height of boom – transport	1,008 mm

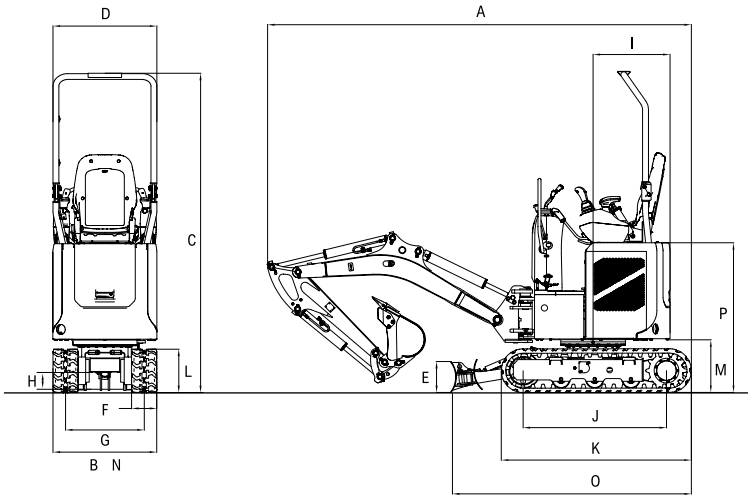

WORKING AREA

A	Max. digging height	3,037 mm
B	Max. dumping height	2,096 mm
	Min. dumping height	542 mm
C	Max. digging depth	1,868 mm
D	Max. vertical digging depth	1,614 mm
E	Max. digging reach	3,539 mm
F	Min. swing radius	550 mm
G	Maximum height at minimum swing radius	2,290 mm
H	Max. clearance with blade up	260 mm
I	Max. blade digging depth (blade down)	212 mm
	Left offset distance of boom	451 mm
	Right offset distance of boom	335 mm
	Left offset angle of boom	50°
	Right offset angle of boom	58°
	Arm head distance with work equipment fully retracted	1,310 mm

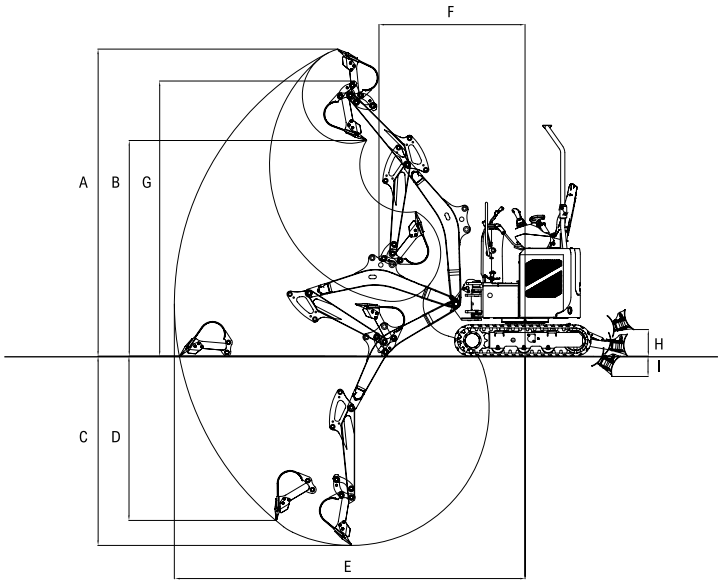

SY10U

STANDARD/OPTIONAL EQUIPMENT

OPERATORS COMFORT / CAB

	SY10U
High back suspension seat	•
Adjustable armrests	•
12V outlet	•
AUX 1 (pedal operated)	•
3" monitor	•

WORKING LIGHTS

	SY10U
Light x 1 – boom (LED)	•
Magnetic beacon	•

UNDERCARRIAGE

	SY10U
Rubber tracks (180 mm)	•
Adjustable undercarriage (745 – 1100mm)	•
Cylinder guards – dozer blade	•
Holes / loops for fixing	•

ENGINE

	SY10U
Diesel filter	•
Air filter	•
Air filter guard	•

SAFETY & SECURITY

	SY10U
ROPS canopy	•
Battery master switch	•
Travel alarm	•
Emergency stop button	•
Retractable seatbelt	•
Seatbelt alarm	OPT
Lockable bonnet	•
Screen with PIN code immobiliser	•
EVI telematics	•

WORKING EQUIPMENT

	SY10U
Double acting circuit for hydraulic quick coupler with piping	•
Attachments change over valve	•
890 mm Arm	•

HYDRAULIC SYSTEM

	SY10U
Swing brake	•
2 speed travel	•
Main filter	•
Hydraulic oil radiator	•
Auxiliary circuit single/directional switching	•

The standard and optional equipment can differ depending on the country in which the machine is delivered. Please contact your local dealer for more information.

SANY



SANY HEAVY MACHINERY (UK) LTD
Unit 6, M8 Interlink Estate,
Coatbridge, Glasgow, ML5 4RP
Tel: 0330 2021 318
Email: info@sanyuk.com

Sanyuk.com

Not all products are available in all markets. As part of our continuous improvement process, we reserve the right to modify specifications and designs without giving prior notice. Machines shown may feature additional options other than the standard machine specification.

HEX - SY10U - 04 - 2026 - EU - V1